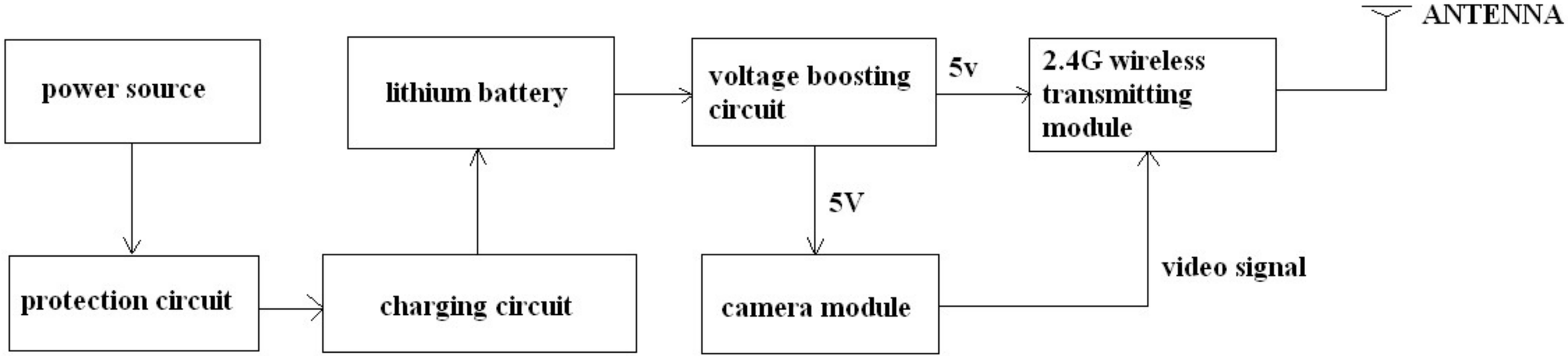
ANTENNA
power source
lithium battery
voltage boosting circuit
5v
2.4G wireless transmitting module
5V
protection circuit
charging circuit
camera module
video signal

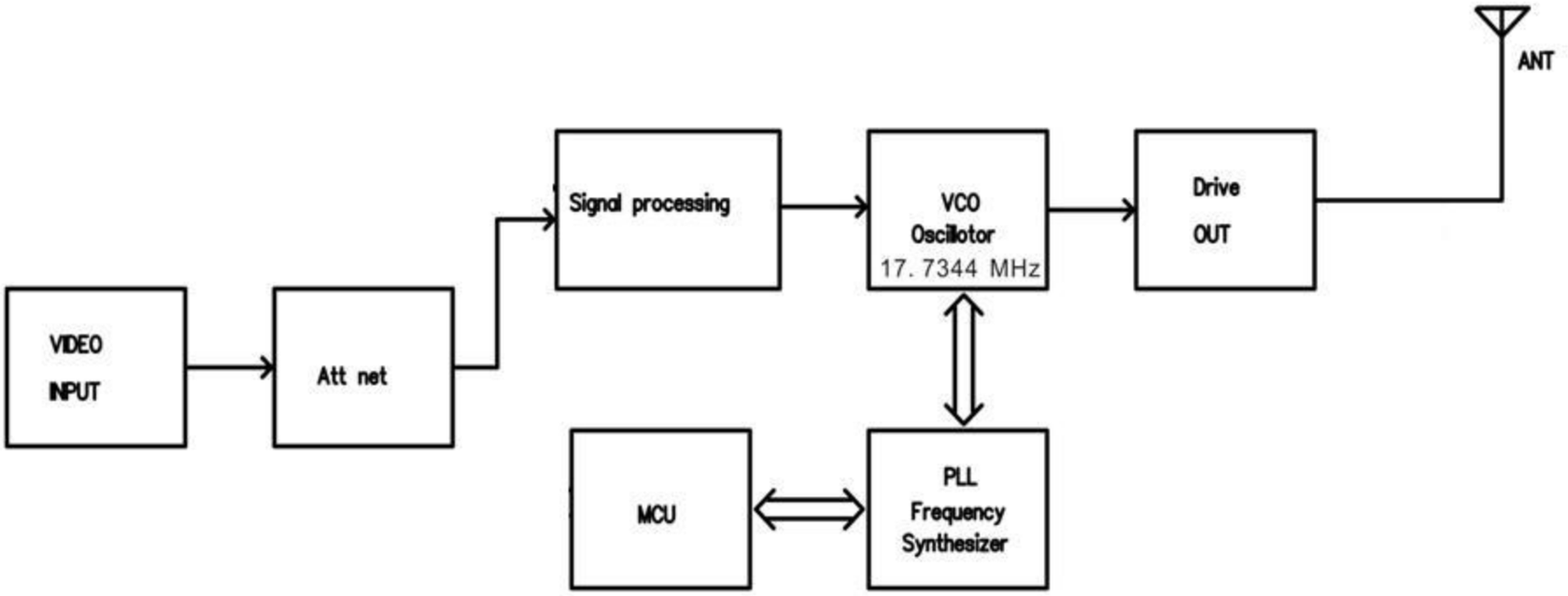
ANT
Signal processing
VCO
Oscillotor
17.7344 MHz
Drive
OUT
VIDEO
INPUT
Att net
MCU
PLL
Frequency
Synthesizer