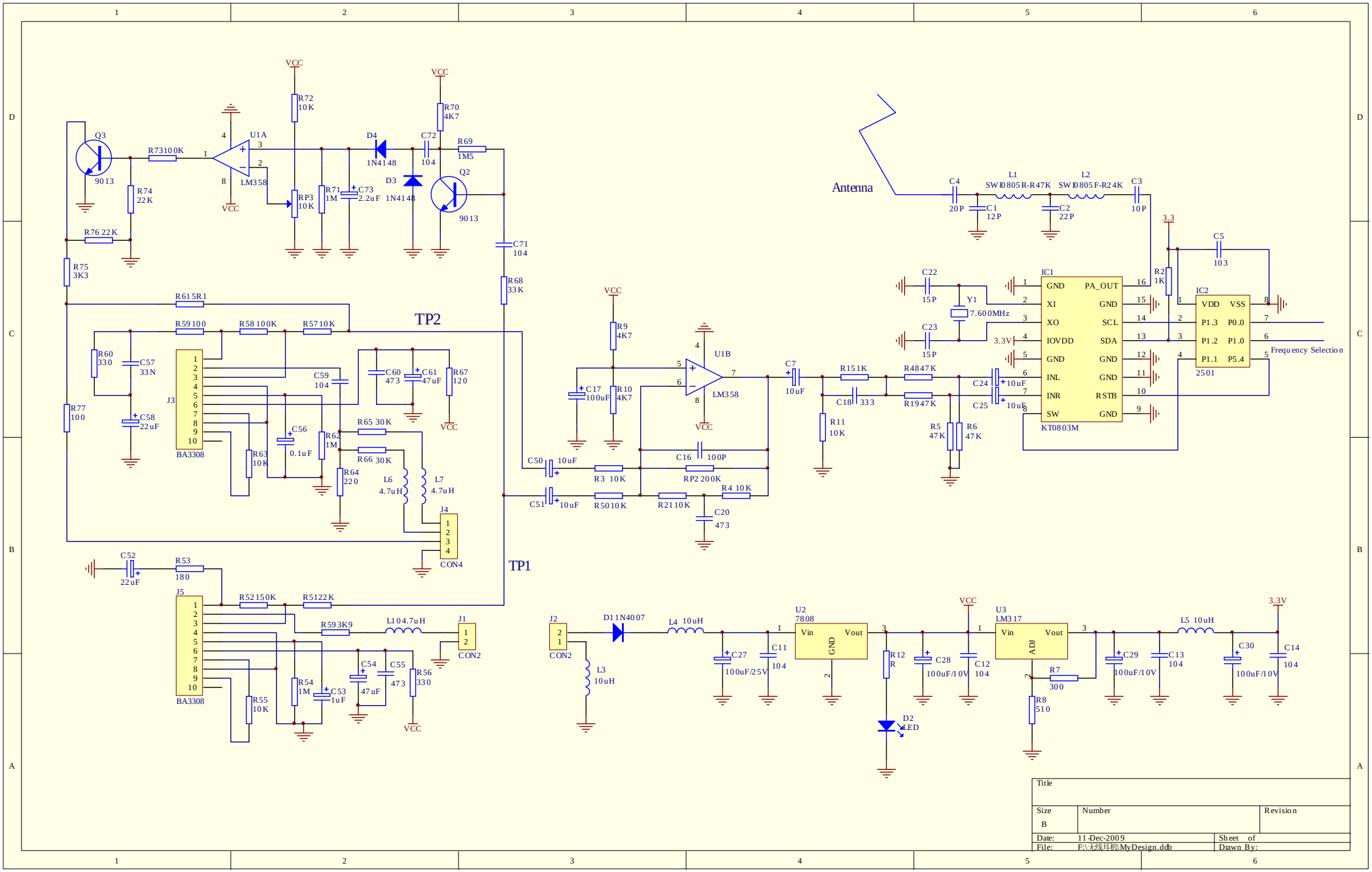

Title		
Size B	Number	Revision
Date: 11-Dec-2009		Sheet of
File: F:\无线耳机\MyDesign.ddb		Drawn By: