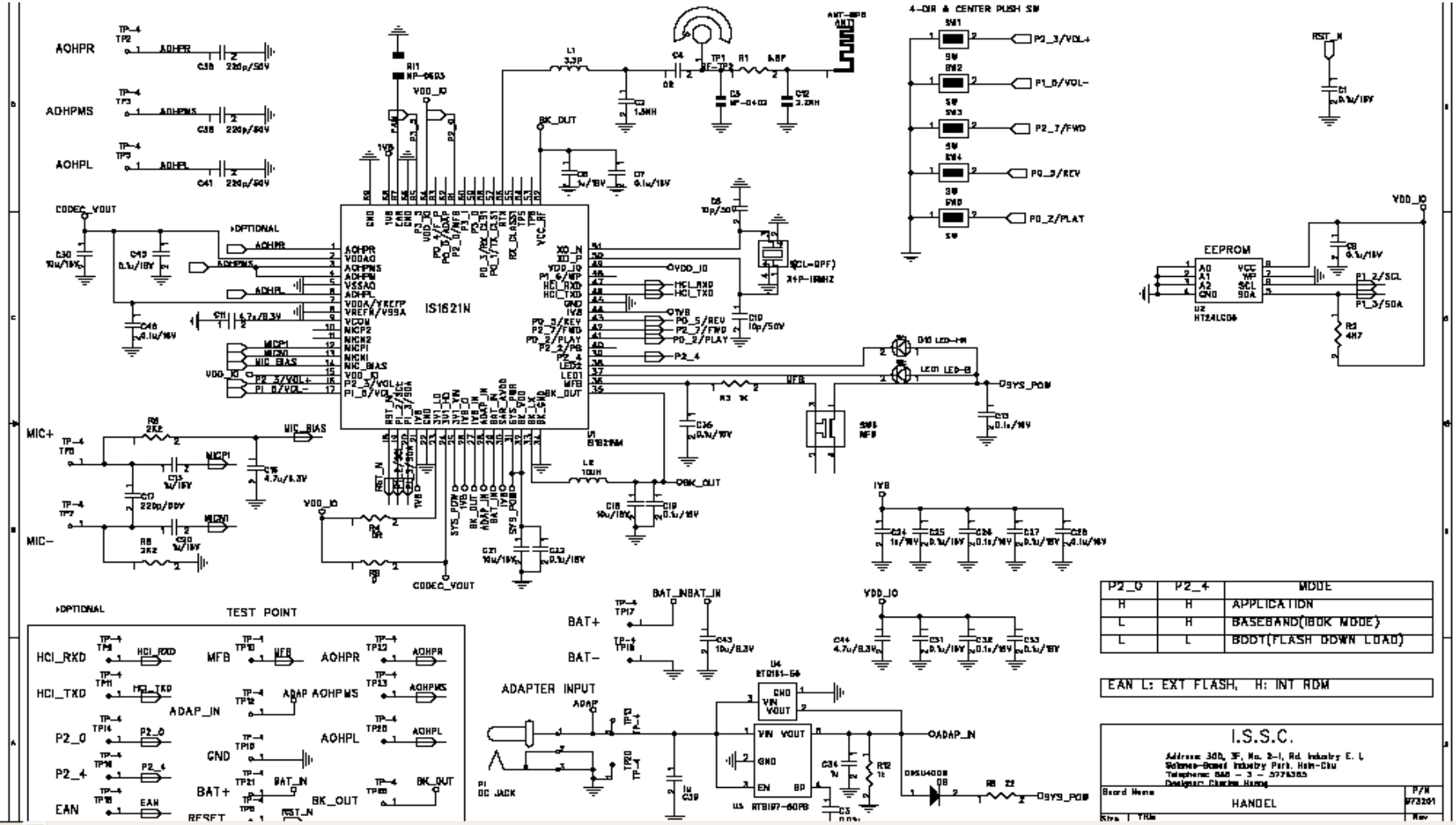
IS1621N
EEPROM
4-DIR & CENTER PUSH SW
ADAPTER INPUT
TEST POINT
AOHPR
AOHPMS
AOHPL
MIC+
MIC-
BAT+
BAT-
HCI_RXD
HCI_TXD
P2_0
P2_4
EAN
MFB
ADAP_IN
GND
BK_OUT
RESET
CODEC_VOUT
VDD_IO
SYS_POW
P2_0 | P2_4 | MODE
H | H | APPLICATION
L | H | BASEBAND(IBOK MODE)
L | L | BOOT(FLASH DOWN LOAD)
EAN L: EXT FLASH, H: INT ROM
I.S.S.C.
HANDEL