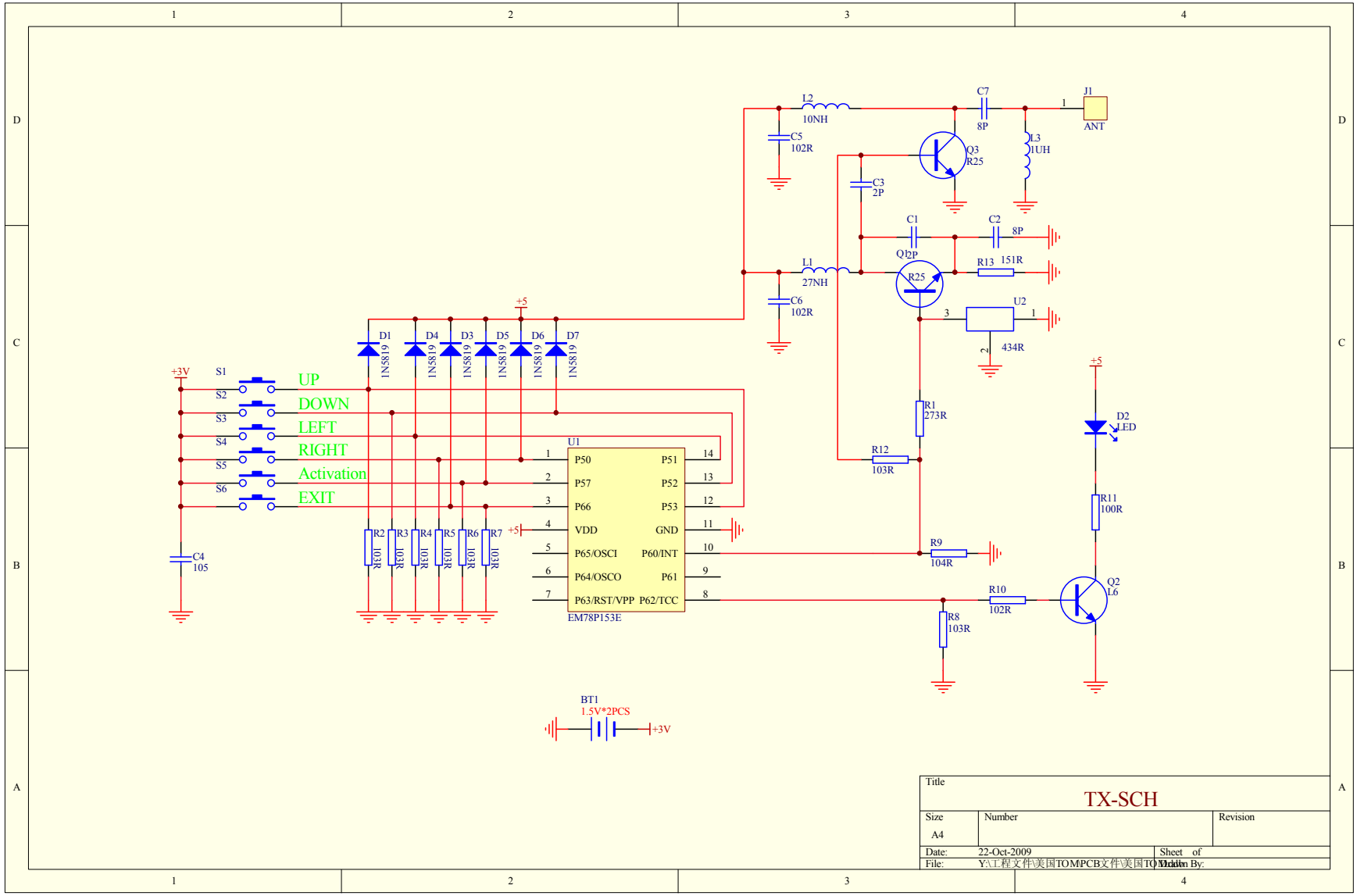

Title	TX-SCH	
Size A4	Number	Revision
Date: 22-Oct-2009		Sheet of
File: Y:\工程文件\美国TOMPCB文件\美国TO		Drawn By: