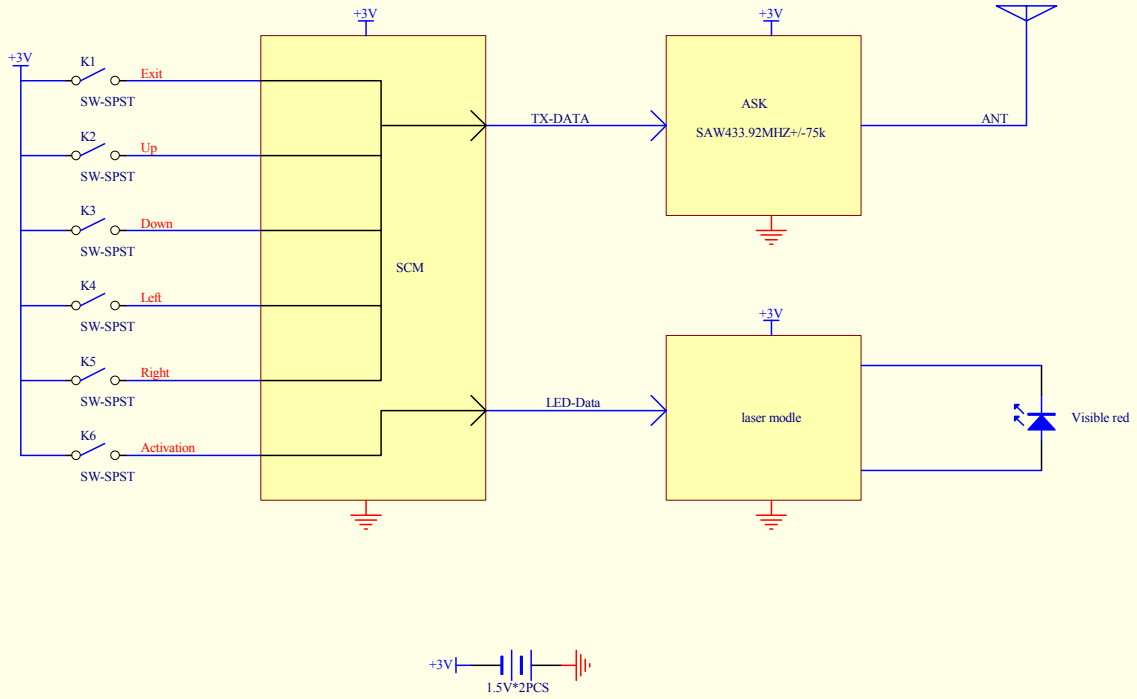

Title		
Size A4	Number	Revision
Date: 22-Oct-2009	Sheet of	
File: Y:\工程文件\美国TOMPCB文件\美国TOM.ddb	Drawn By:	