Schematic diagram

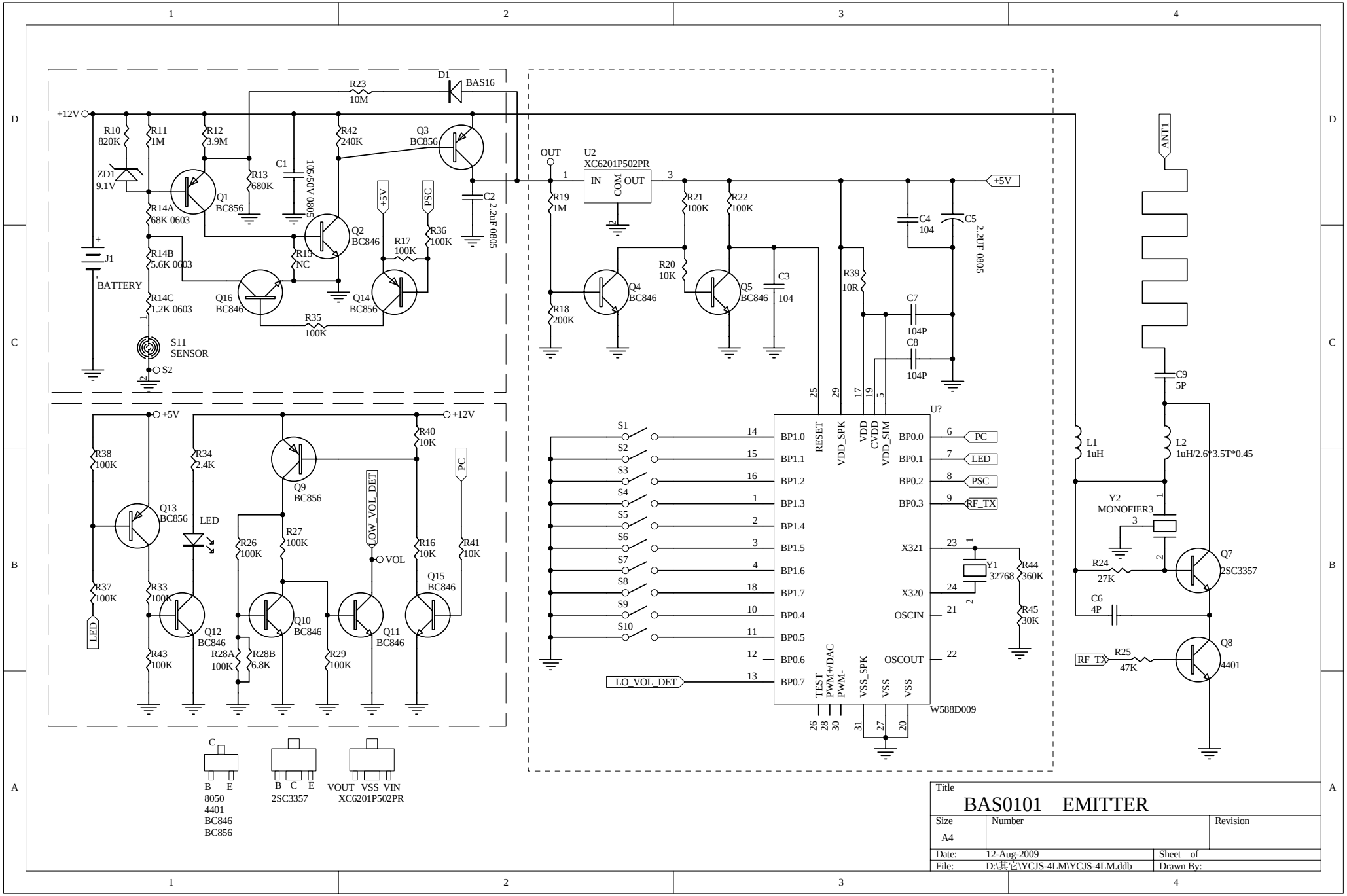

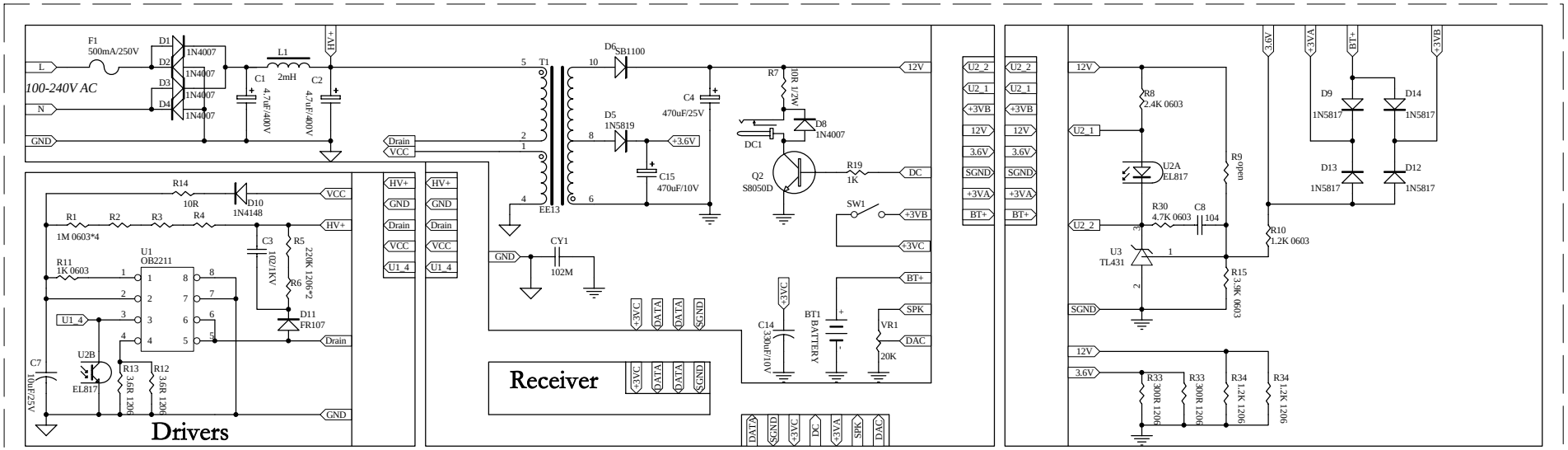

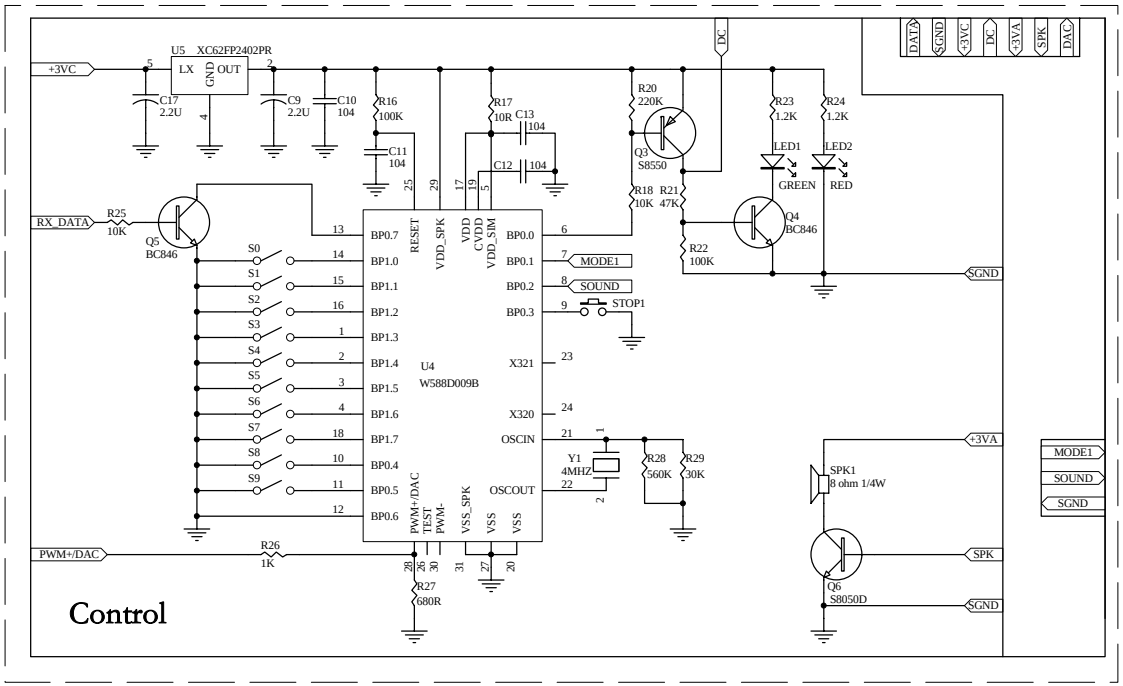

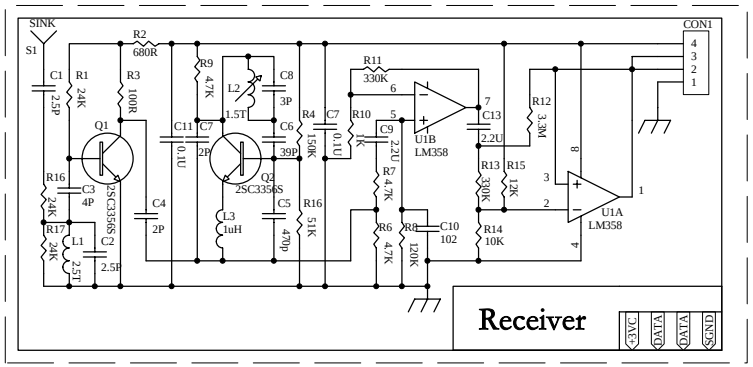

Title	BAS:0101 POWER/CONTROL/RECEIVER	
Size A3	Number	Revision
Date: 12-Aug-2009	Sheet of	
File: D:\其它\YCJS-4LM\YCJS-4LM.ddb	Drawn By:	

ZBIN