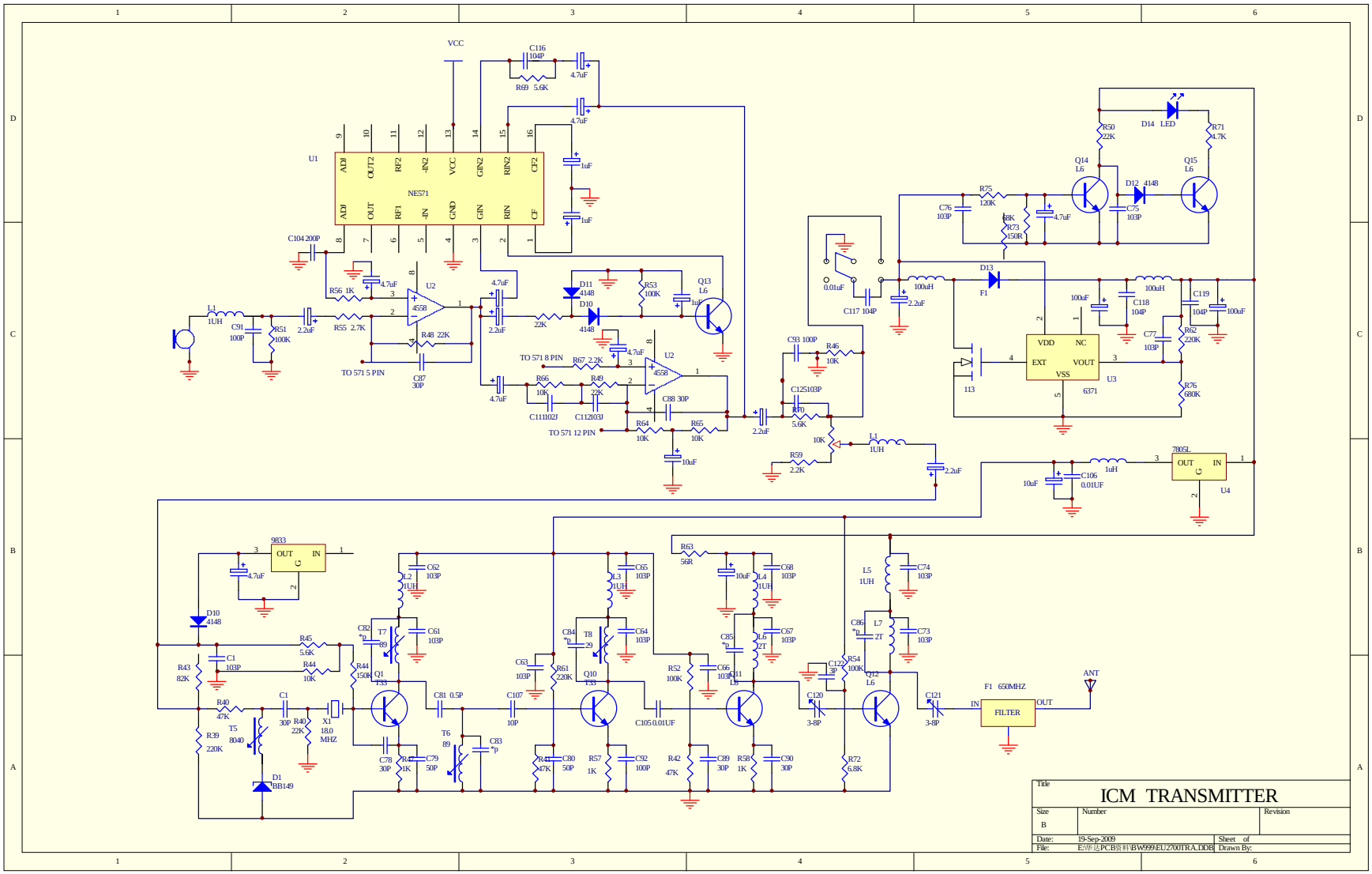
ICM TRANSMITTER
Title
Size
B
Number
Revision
Date: 19-Sep-2009
Sheet of
File: E:\华达PCB资料\BW999\EUZ700TRA.DDB
Drawn By:
VCC
U1
NE571
ADJ
OUT2
RF2
JN2
VCC
GIN2
RIN2
CF2
ADJ
OUT
RF1
JN
GND
GIN
RIN
CF
U2
4558
U3
6371
VDD
NC
EXT
VOUT
VSS
U4
7805L
OUT
IN
G
9833
OUT
IN
G
Q13
L6
Q14
L6
Q15
L6
Q10
F33
Q11
L6
Q12
L6
Q1
F33
D14 LED
D12 4148
D11
4148
D10
4148
D13
F1
D1
BB149
T5
8040
T6
89
T7
89
T8
29
X1
18.0
MHZ
F1 650MHZ
FILTER
IN
OUT
ANT
TO 571 5 PIN
TO 571 8 PIN
TO 571 12 PIN
L1
1UH
L2
1UH
L3
1UH
L4
1UH
L5
1UH
L6
2T
L7
2T
R56 1K
R55 2.7K
R51
100K
R48 22K
R69 5.6K
R53
100K
R67 2.2K
R66
10K
R49
22K
R64
10K
R65
10K
R46
10K
R59
2.2K
R50
22K
R71
4.7K
R75
120K
R73
150R
R62
220K
R76
680K
R45
5.6K
R44
10K
R43
82K
R40
47K
R39
220K
R44
150K
R61
220K
R52
100K
R54
100K
R42
1K
R41
47K
R57
1K
R42
47K
R58
1K
R72
6.8K
R63
56R
C116
104P
C104 200P
C91
100P
C87
30P
C111102J
C112103J
C88 30P
C125103P
C93 100P
C117 104P
C76
103P
C75
103P
C118
104P
C119
104P
C77
103P
C106
0.01UF
C1
103P
C1
30P
C78
30P
C79
50P
C80
50P
C92
100P
C89
30P
C90
30P
C105 0.01UF
C107
10P
C81 0.5P
C83
*p
C120
3-8P
C121
3-8P
C122
3P
C74
103P
C73
103P
C61
103P
C62
103P
C63
103P
C64
103P
C65
103P
C66
103P
C67
103P
C68
103P
C82
*p
C84
*p
C85
*p
C86
*p
C40
22K
C45 200P
C46 200P
C47 200P
C48 200P
C49 200P
C50 200P
C51 200P
C52 200P
C53 200P
C54 200P
C55 200P
C56 200P
C57 200P
C58 200P
C59 200P
C60 200P
C61 200P
C62 200P
C63 200P
C64 200P