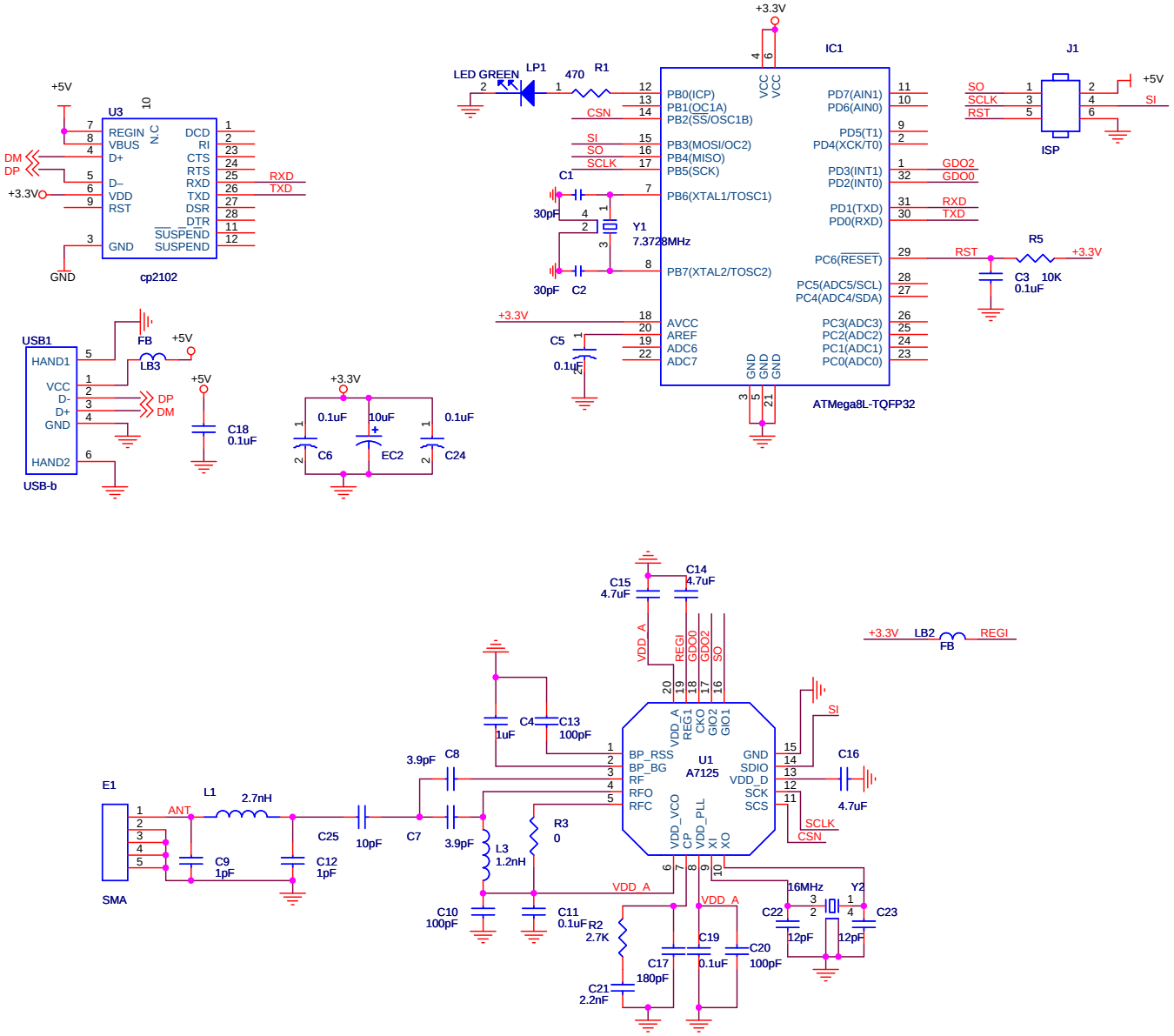

Title	<Title>	
Size B	Document Number <Doc>	Rev Ver6.5
Date: Monday, October 12, 2009	Sheet 1 of 1	