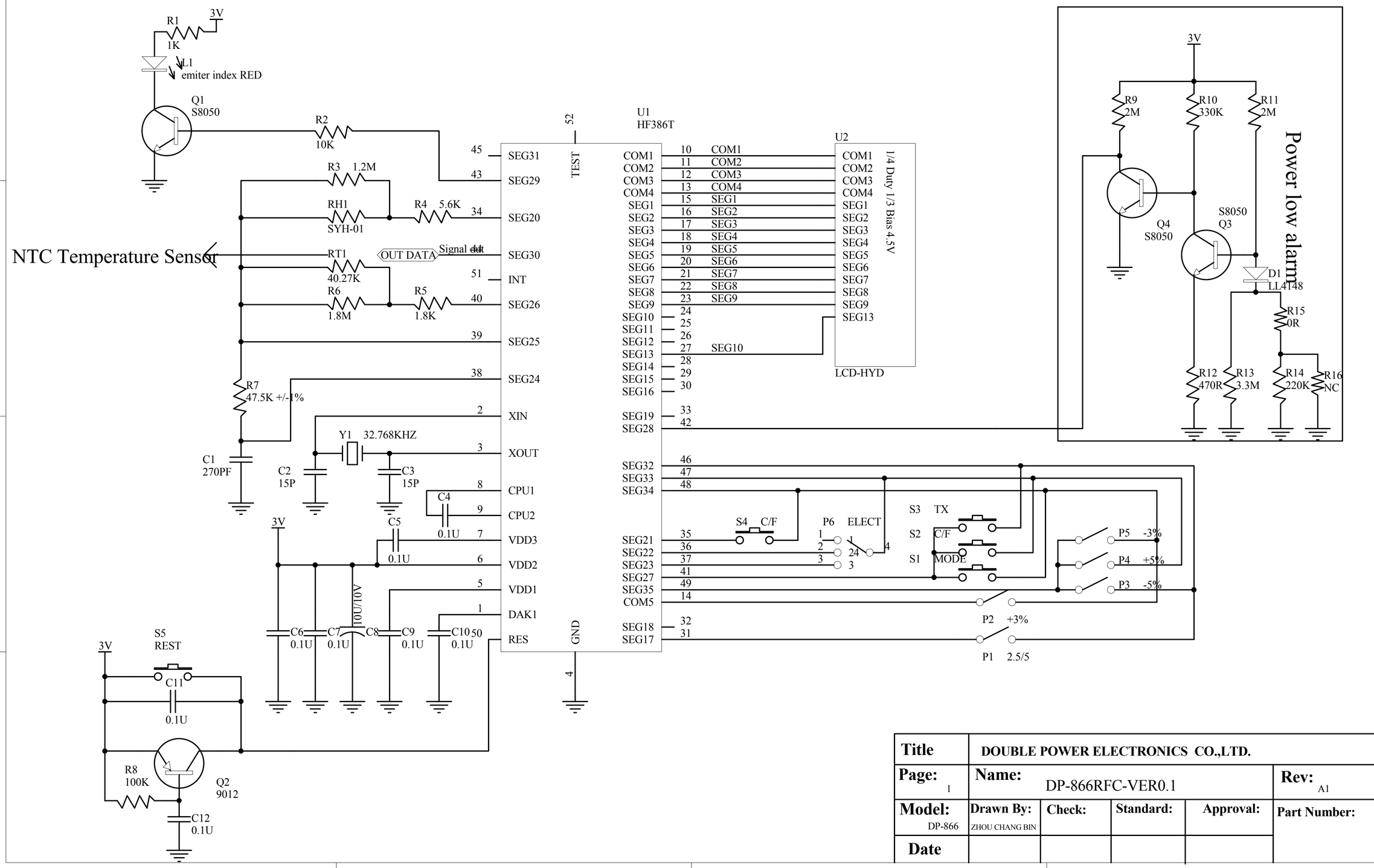

Title	**DOUBLE POWER ELECTRONICS CO.,LTD.**				
Page: 1	**Name:** DP-866RFC-VER0.1				**Rev:** A1
Model: DP-866	**Drawn By:** ZHOU CHANG BIN	**Check:**	**Standard:**	**Approval:**	**Part Number:**
Date					