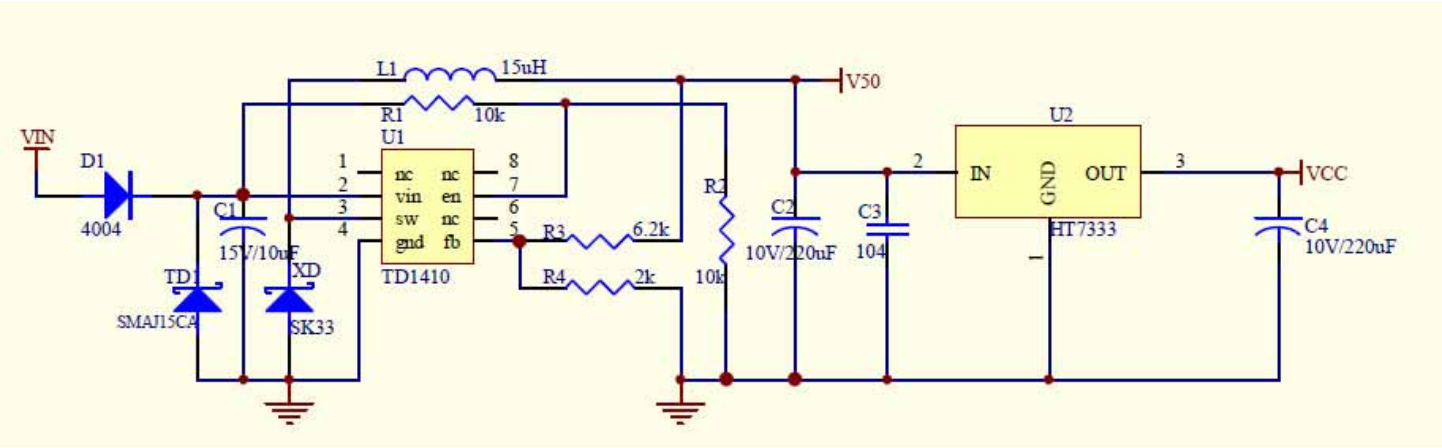
VIN
D1
4004
C1
15V/10uF
TD1
SMAJ15CA
XD
SK33
L1
15uH
R1
10k
U1
nc
vin
sw
gnd
nc
en
nc
fb
TD1410
R3
6.2k
R4
2k
R2
10k
V50
C2
10V/220uF
C3
104
U2
IN
GND
OUT
HT7333
VCC
C4
10V/220uF

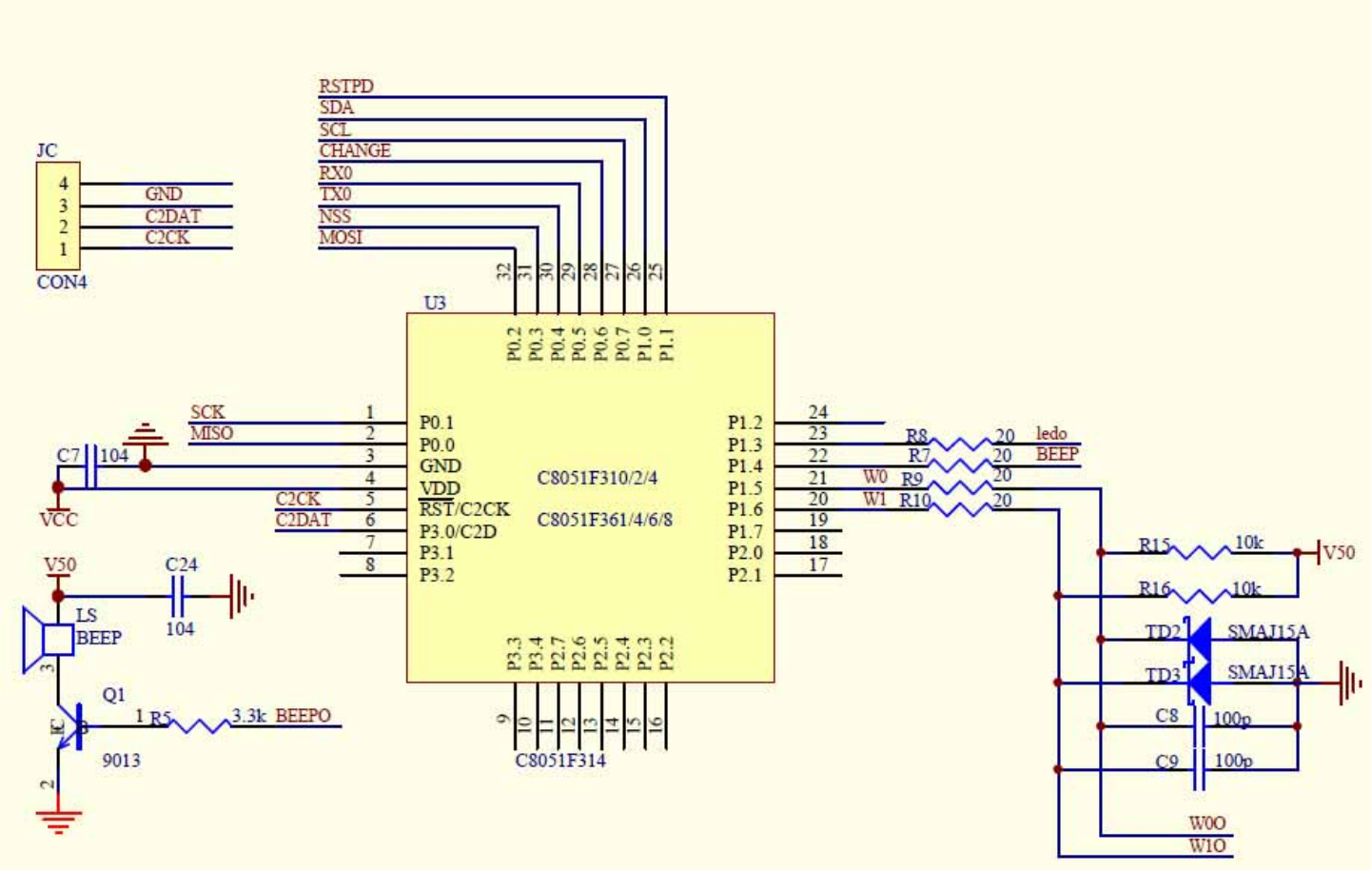
JC
GND
C2DAT
C2CK
CON4
RSTPD
SDA
SCL
CHANGE
RX0
TX0
NSS
MOSI
U3
P0.2
P0.3
P0.4
P0.5
P0.6
P0.7
P1.0
P1.1
SCK
MISO
C7
104
VCC
C2CK
C2DAT
P0.1
P0.0
GND
VDD
RST/C2CK
P3.0/C2D
P3.1
P3.2
C8051F310/2/4
C8051F361/4/6/8
P1.2
P1.3
P1.4
P1.5
P1.6
P1.7
P2.0
P2.1
R8
R7
R9
R10
ledo
BEEP
W0
W1
R15
R16
10k
V50
TD2
TD3
SMAJ15A
C8
C9
100p
W0O
W1O
V50
C24
104
LS
BEEP
Q1
9013
R5
3.3k
BEEPO
P3.3
P3.4
P2.7
P2.6
P2.5
P2.4
P2.3
P2.2
C8051F314

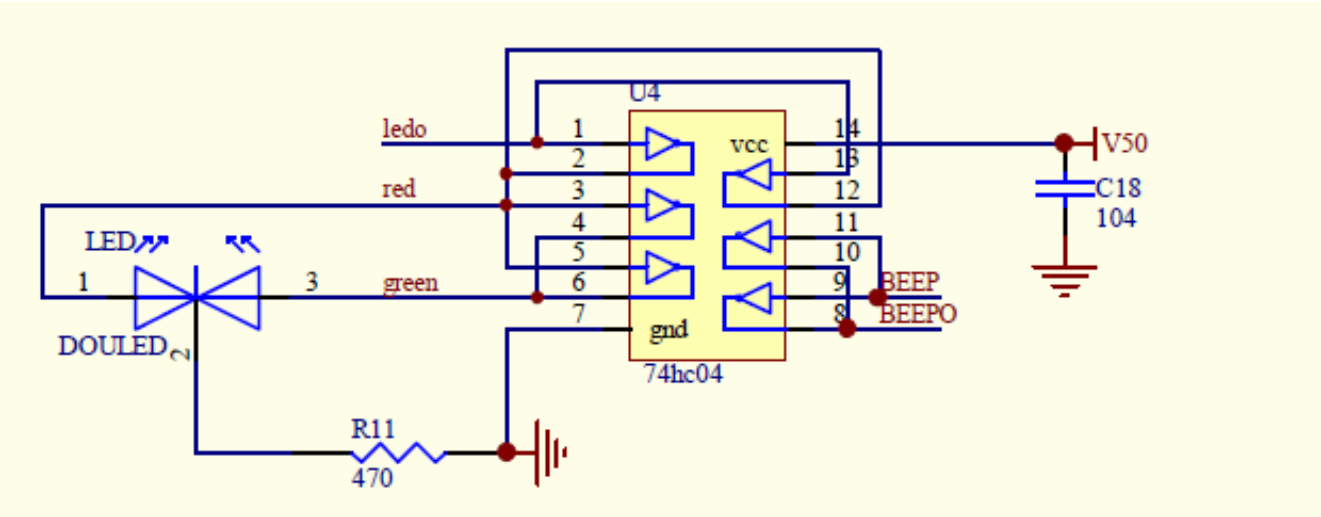
U4
ledo
red
green
LED
DOULED
1
3
1
2
3
4
5
6
7
14
13
12
11
10
9
8
vcc
gnd
74hc04
V50
C18
104
BEEP
BEEPO
R11
470

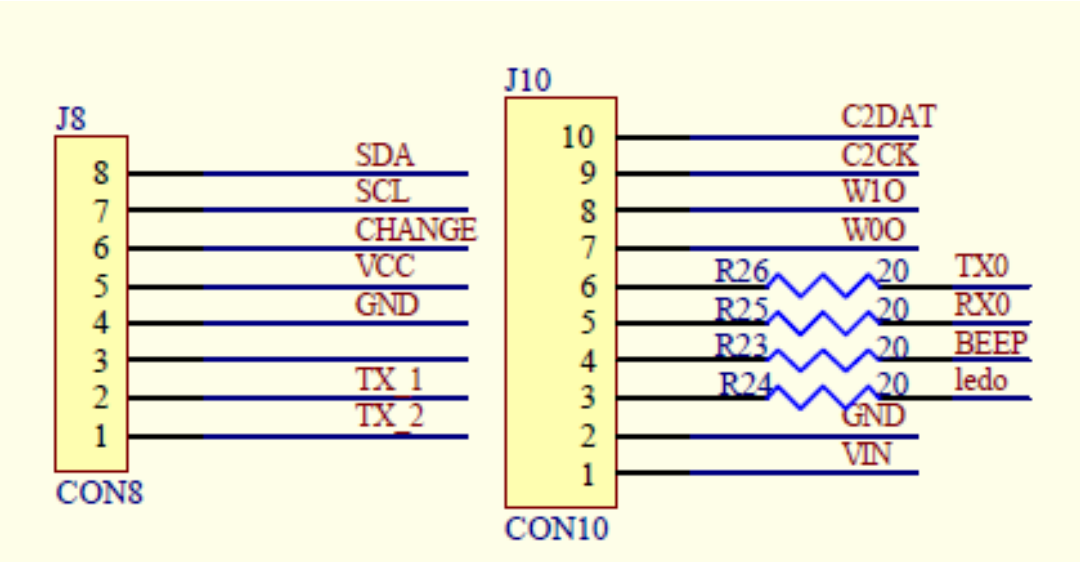
J8
8
7
6
5
4
3
2
1
CON8
SDA
SCL
CHANGE
VCC
GND
TX_1
TX_2
J10
10
9
8
7
6
5
4
3
2
1
CON10
C2DAT
C2CK
W1O
W0O
R26
R25
R23
R24
20
20
20
20
TX0
RX0
BEEP
ledo
GND
VIN

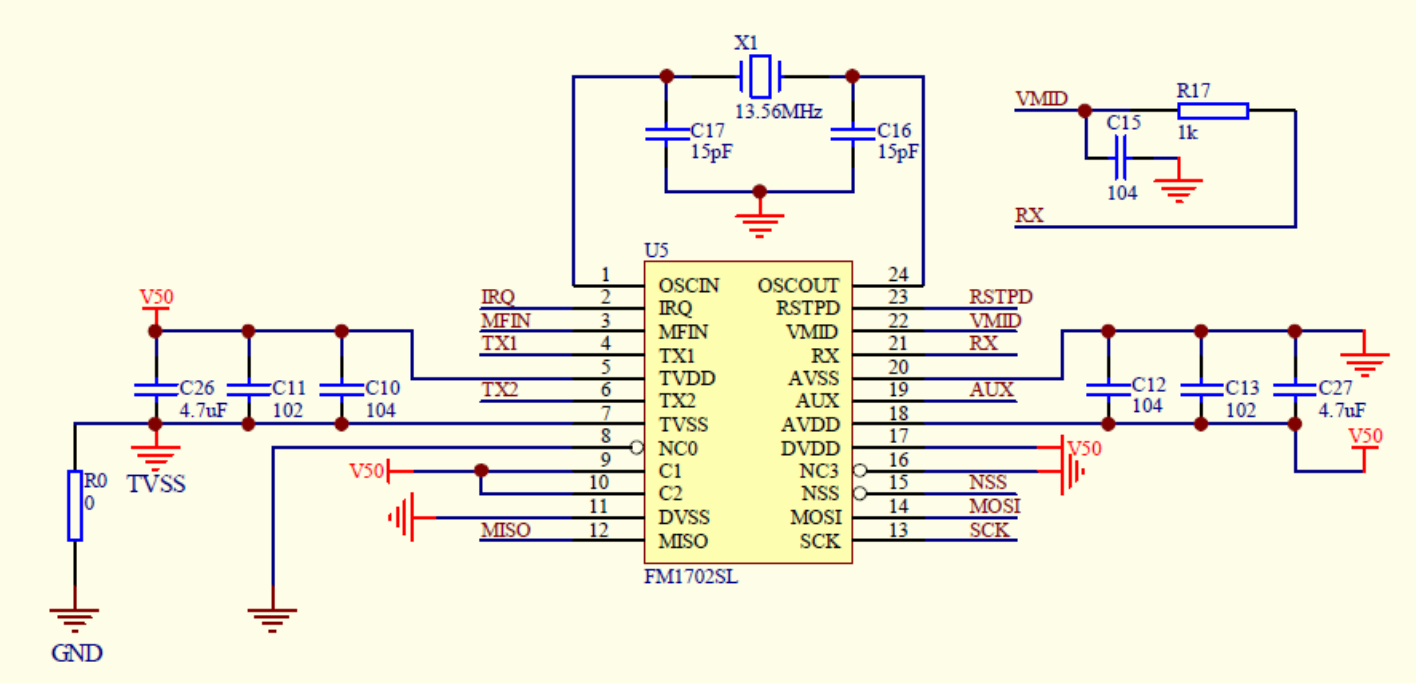
X1
13.56MHz
C17
15pF
C16
15pF
VMID
R17
1k
C15
104
RX
U5
V50
IRQ
MFIN
TX1
TX2
MISO
OSCIN
IRQ
MFIN
TX1
TVDD
TX2
TVSS
NC0
C1
C2
DVSS
MISO
OSCOUT
RSTPD
VMID
RX
AVSS
AUX
AVDD
DVDD
NC3
NSS
MOSI
SCK
RSTPD
VMID
RX
AUX
NSS
MOSI
SCK
FM1702SL
C26
4.7uF
C11
102
C10
104
C12
104
C13
102
C27
4.7uF
R0
0
TVSS
GND

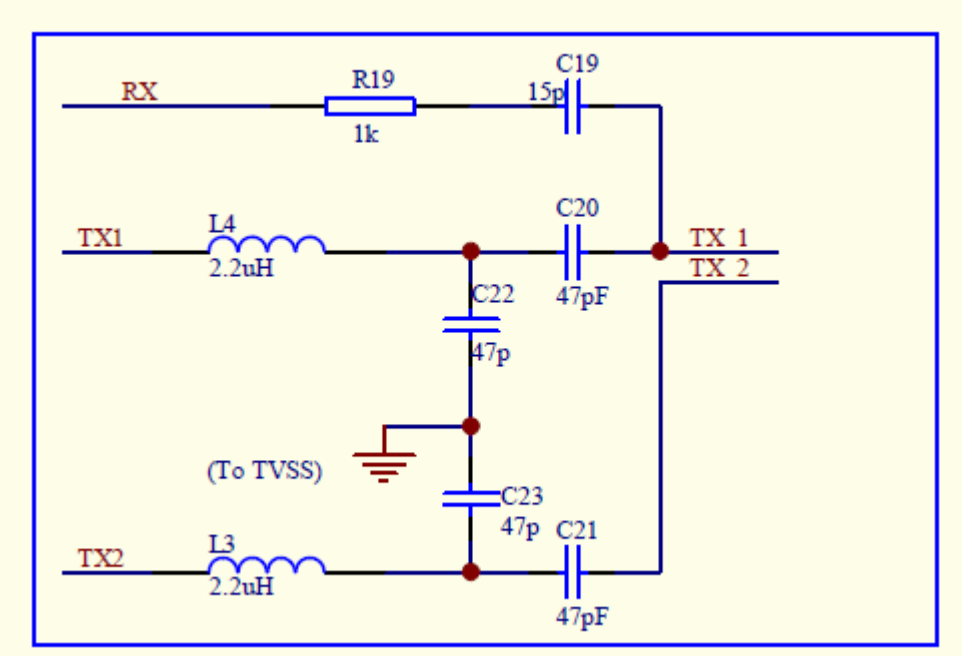
RX
R19
1k
C19
15p
TX1
L4
2.2uH
C20
47pF
TX 1
TX 2
C22
47p
(To TVSS)
C23
47p
C21
47pF
TX2
L3
2.2uH

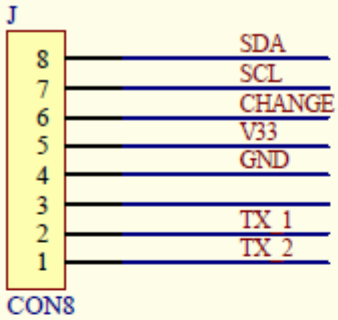
J
8
7
6
5
4
3
2
1
SDA
SCL
CHANGE
V33
GND
TX 1
TX 2
CON8

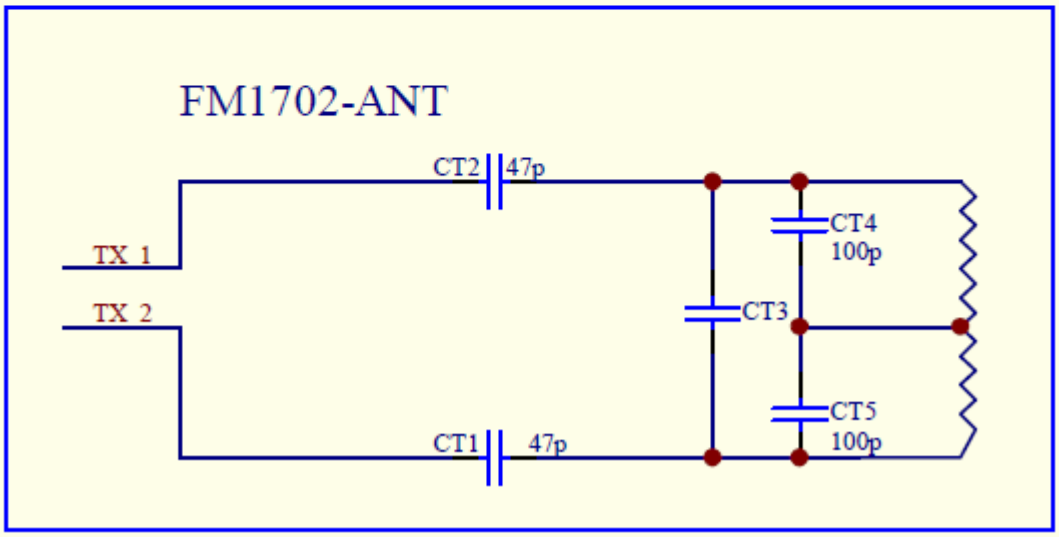
FM1702-ANT
CT2
47p
TX 1
TX 2
CT4
100p
CT3
CT5
100p
CT1
47p