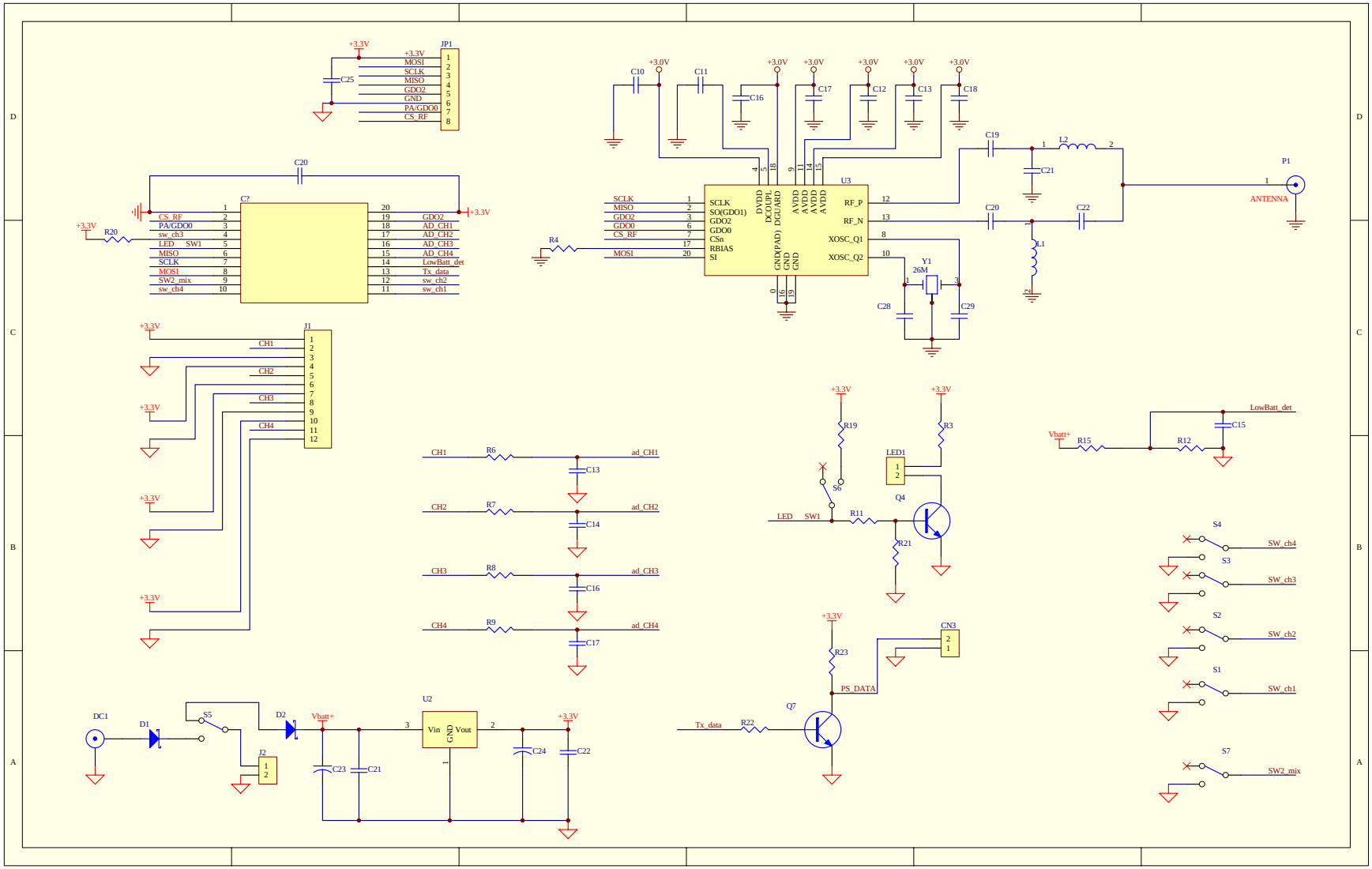
JP1
+3.3V
MOSI
SCLK
MISO
GDO2
GND
PA/GDO0
CS_RF
C25
C20
C7
CS_RF
PA/GDO0
sw_ch3
LED SW1
MISO
SCLK
MOSI
SW2_mix
sw_ch4
GDO2
AD_CH1
AD_CH2
AD_CH3
AD_CH4
LowBatt_det
Tx_data
sw_ch2
sw_ch1
R20
+3.0V
C10
C11
C16
C17
C12
C13
C18
C19
L2
C21
P1
ANTENNA
U3
SCLK
SO(GDO1)
GDO2
GDO0
CSn
RBIAS
SI
DVDD
DCO/DPI
DGU/ARD
AVDD
GND(PAD)
GND
RF_P
RF_N
XOSC_Q1
XOSC_Q2
C20
C22
L1
R4
Y1
26M
C28
C29
J1
CH1
CH2
CH3
CH4
R6
R7
R8
R9
ad_CH1
ad_CH2
ad_CH3
ad_CH4
C13
C14
C16
C17
R19
R3
S6
LED1
Q4
LED SW1
R11
R21
LowBatt_det
Vbatt+
R15
R12
C15
S4
S3
S2
S1
S7
SW_ch4
SW_ch3
SW_ch2
SW_ch1
SW2_mix
CN3
R23
PS_DATA
Q7
Tx_data
R22
DC1
D1
S5
D2
J2
Vbatt+
C23
C21
U2
Vin
Vout
GND
C24
C22