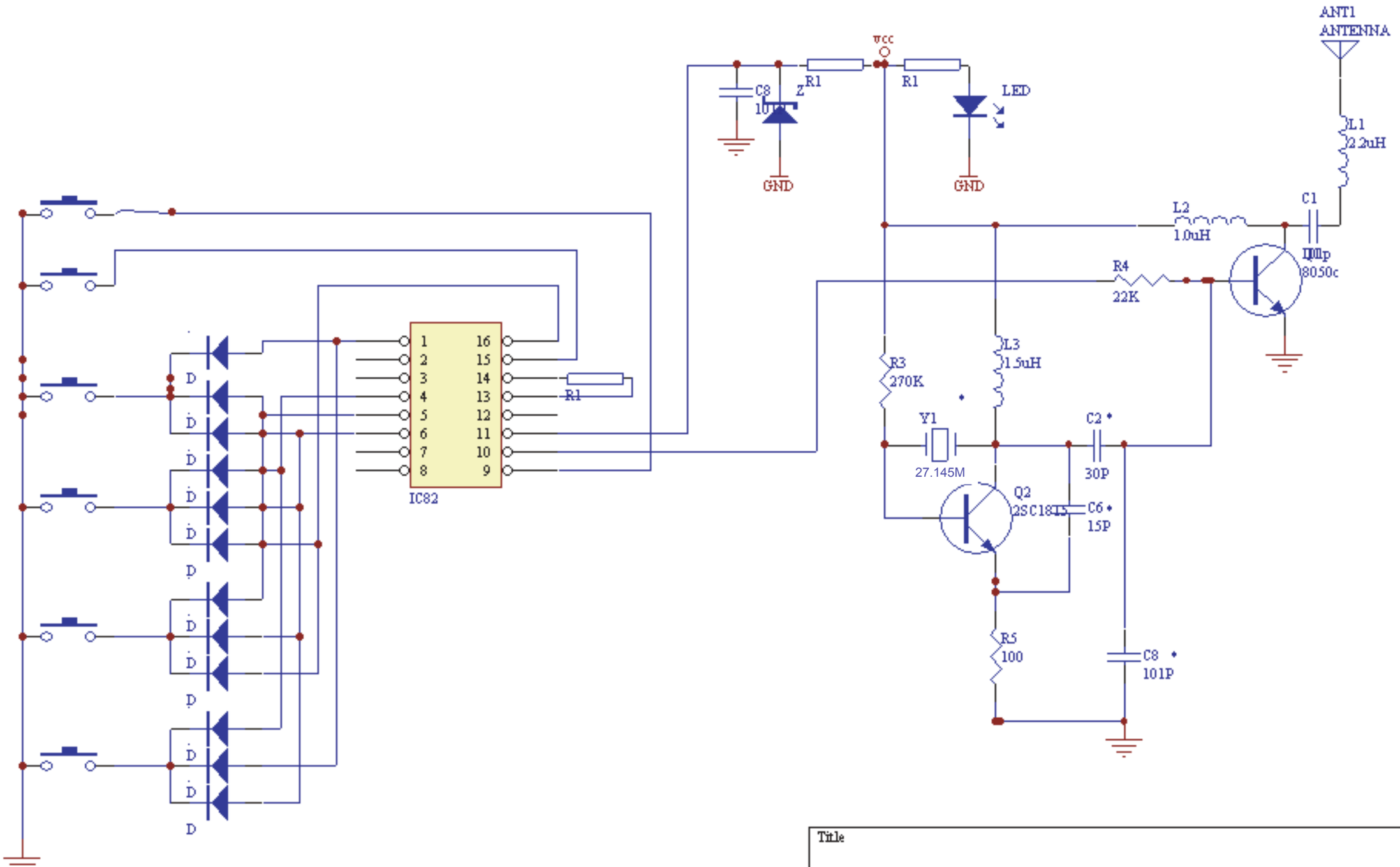

Title		
Size	Number	Revision