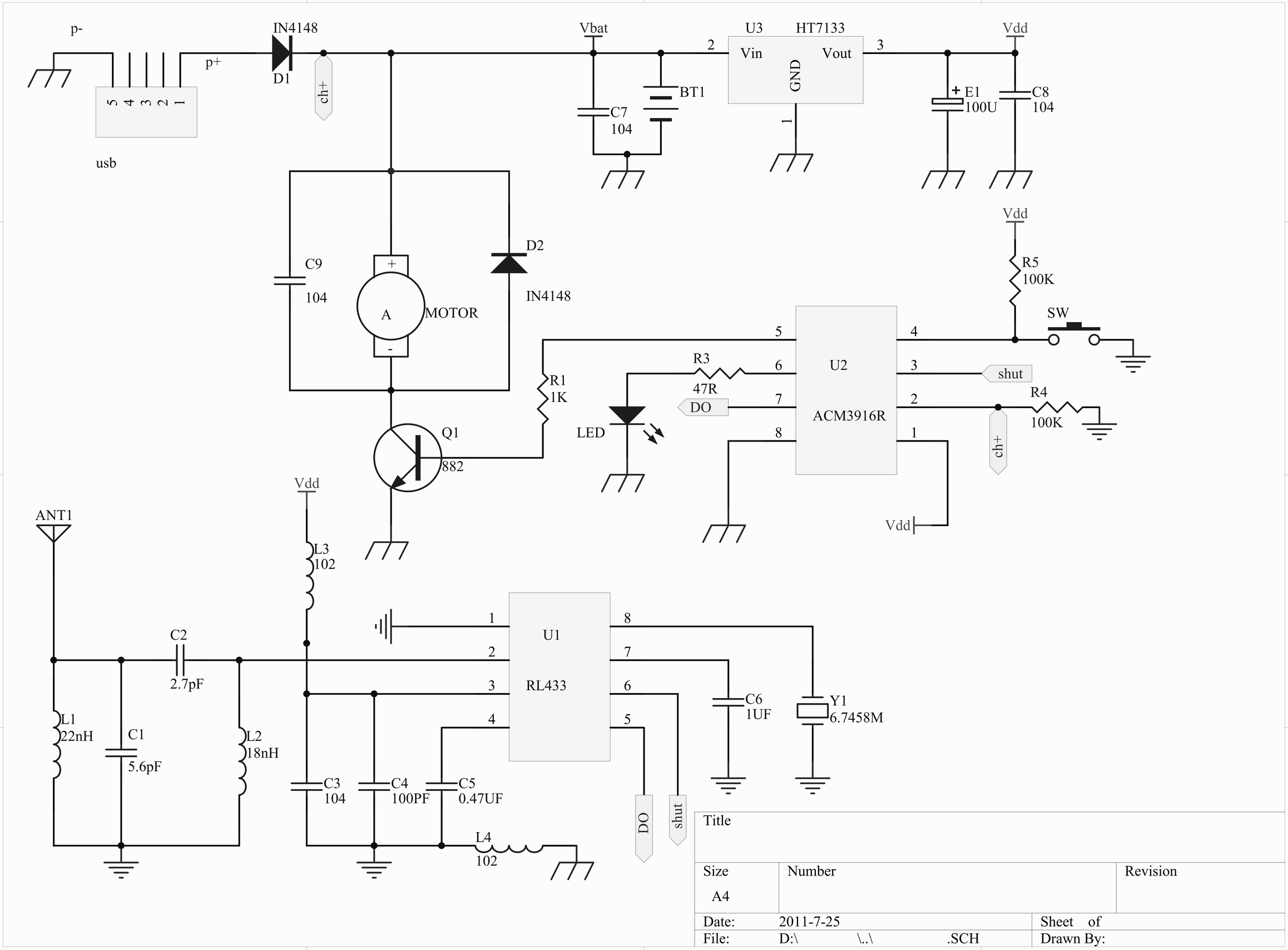

Title		
Size A4	Number	Revision
Date: 2011-7-25		Sheet of
File: D:\ \..\ .SCH		Drawn By: