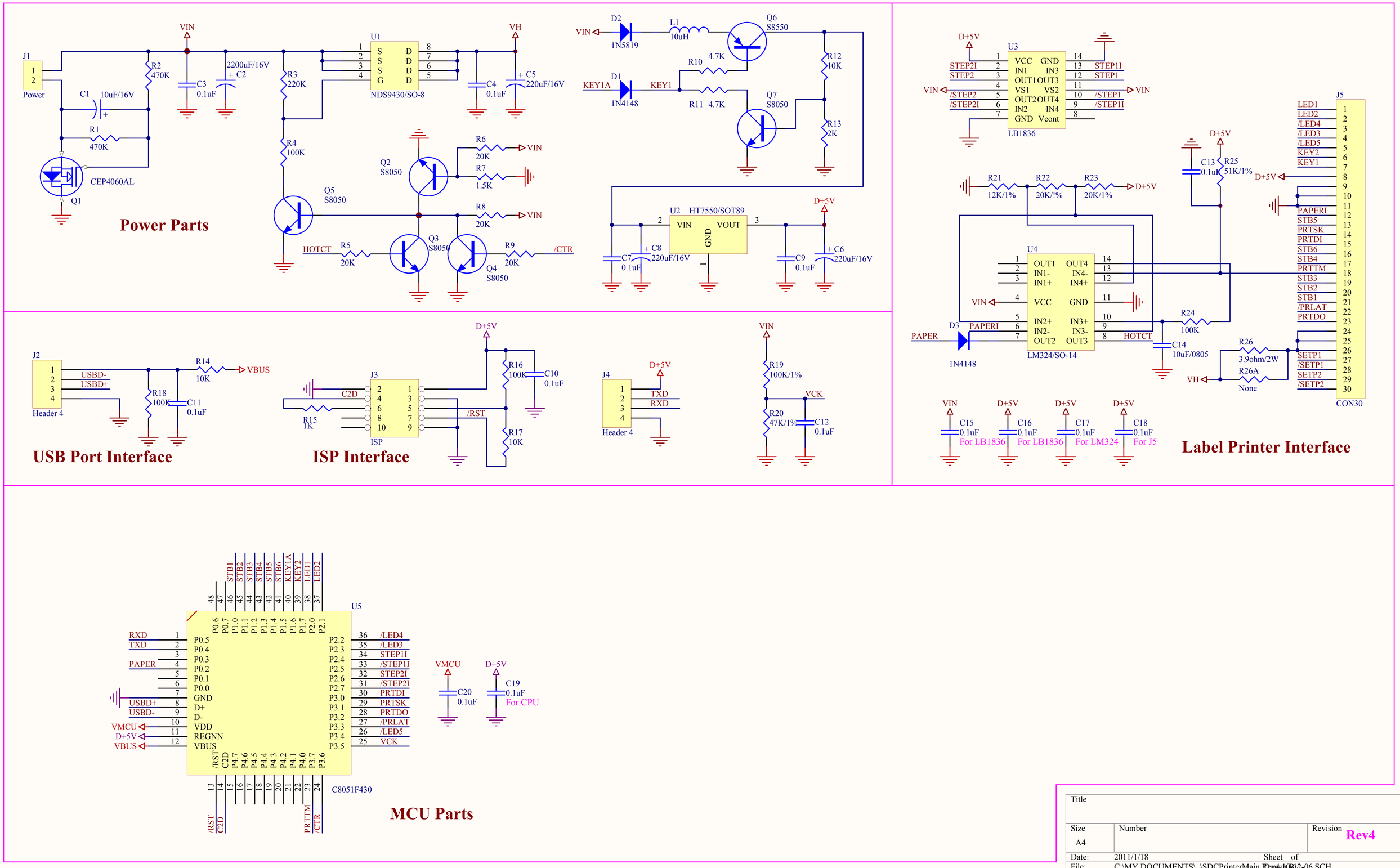

Title		
Size A4	Number	Revision Rev4
Date: 2011/1/18		Sheet of
File: C:\MY DOCUMENTS\..\SDCPrinterMain.Drawing2-06.SCH		Drawn By: