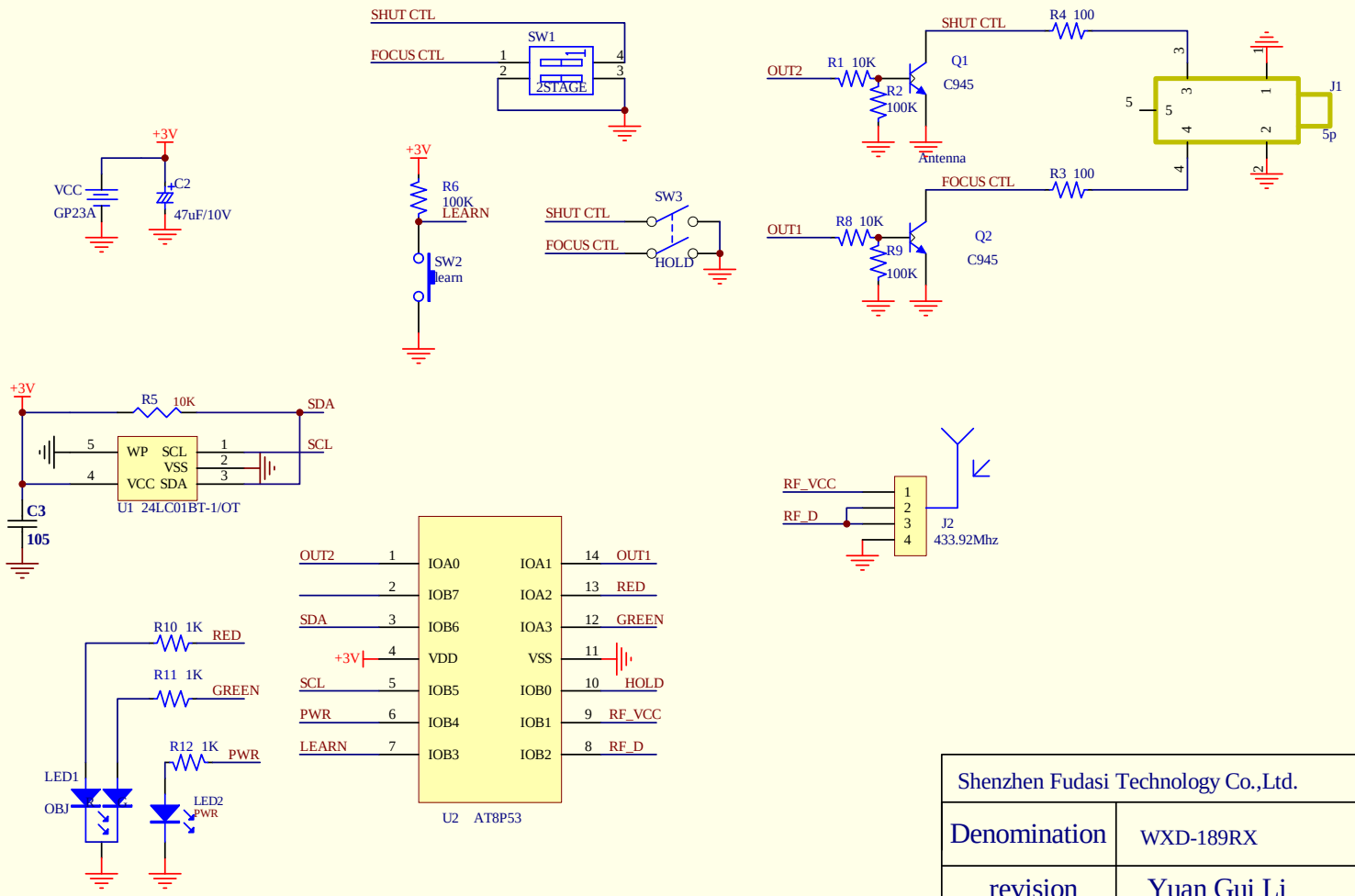

Shenzhen Fudasi Technology Co.,Ltd.	
Denomination	WXD-189RX
revision	Yuan Gui Li
Auditing	Yuan Bo Chen
Sheet of: 1/1	Date 17-November-2009