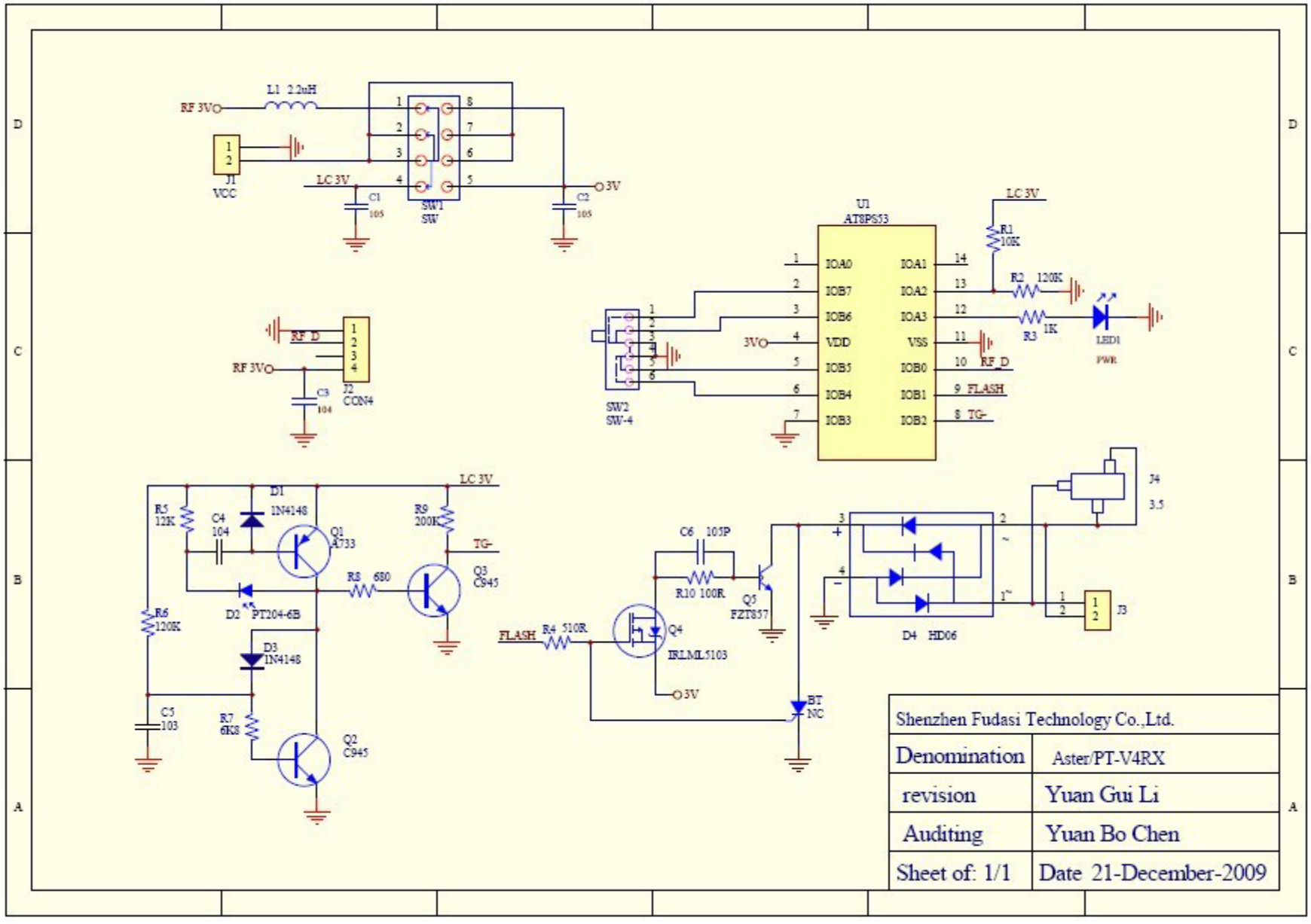
RF 3V
L1 2.2uH
J1
VCC
LC 3V
C1
105
SW1
SW
C2
105
3V
RF_D
RF 3V
C3
104
J2
CON4
U1
AT8PS53
IOA0
IOB7
IOB6
VDD
IOB5
IOB4
IOB3
IOA1
IOA2
IOA3
VSS
IOB0
IOB1
IOB2
FLASH
TG-
R1
10K
R2 120K
R3 1K
LED1
PWR
SW2
SW-4
R5
12K
C4
104
D1
1N4148
Q1
A733
R9
200K
Q3
C945
R8 680
D2 PT204-6B
R6
120K
D3
1N4148
C5
103
R7
6K8
Q2
C945
C6 105P
R10 100R
Q5
FZT857
FLASH
R4 510R
Q4
IRLML5103
BT
NC
D4 HD06
J4
3.5
J3
Shenzhen Fudasi Technology Co.,Ltd.
Denomination
Aster/PT-V4RX
revision
Yuan Gui Li
Auditing
Yuan Bo Chen
Sheet of: 1/1
Date 21-December-2009