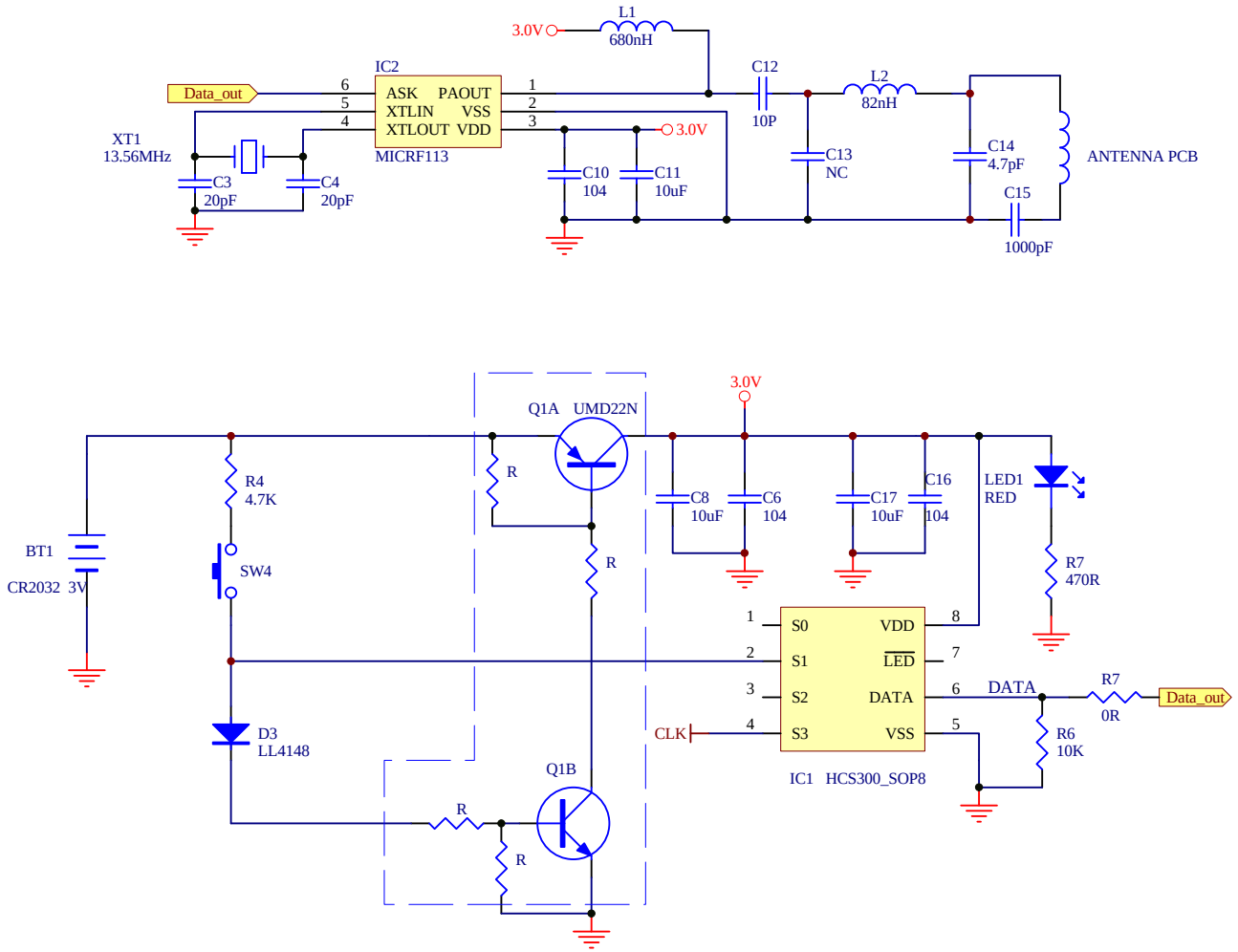

Title	X219-1	
Size A4	Number	Revision
Date: 14-May-2014	Sheet of	
File: E:\Tony\Remote controller\220_219 Series\X219-220V01-V10.DDB	Drawn By:	

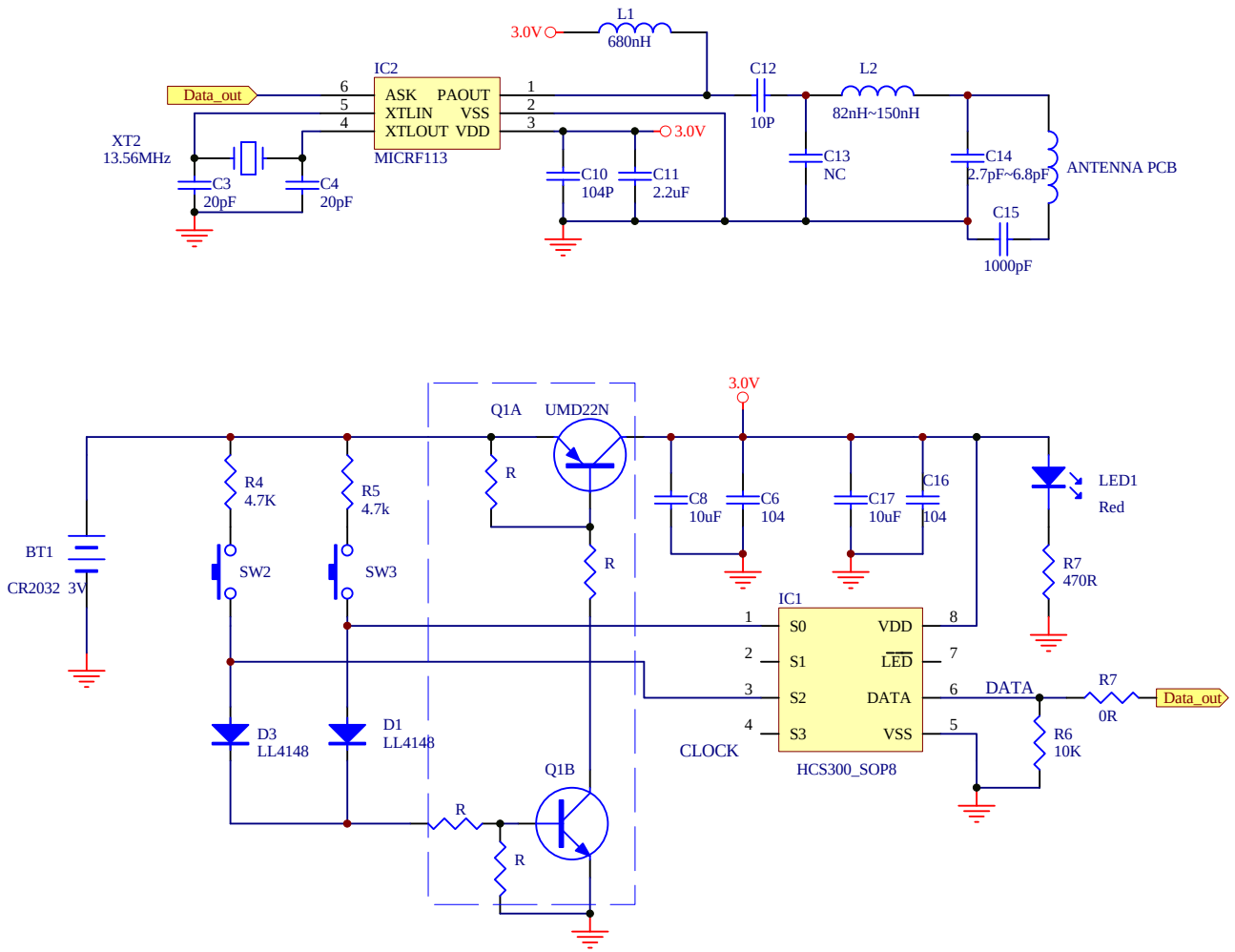

Title	X219-2	
Size A4	Number	Revision
Date: 14-May-2014	Sheet of	
File: E:\Tony\Remote controller\220_219 Series\X219-220V01-V10.DDB	Drawn By:	