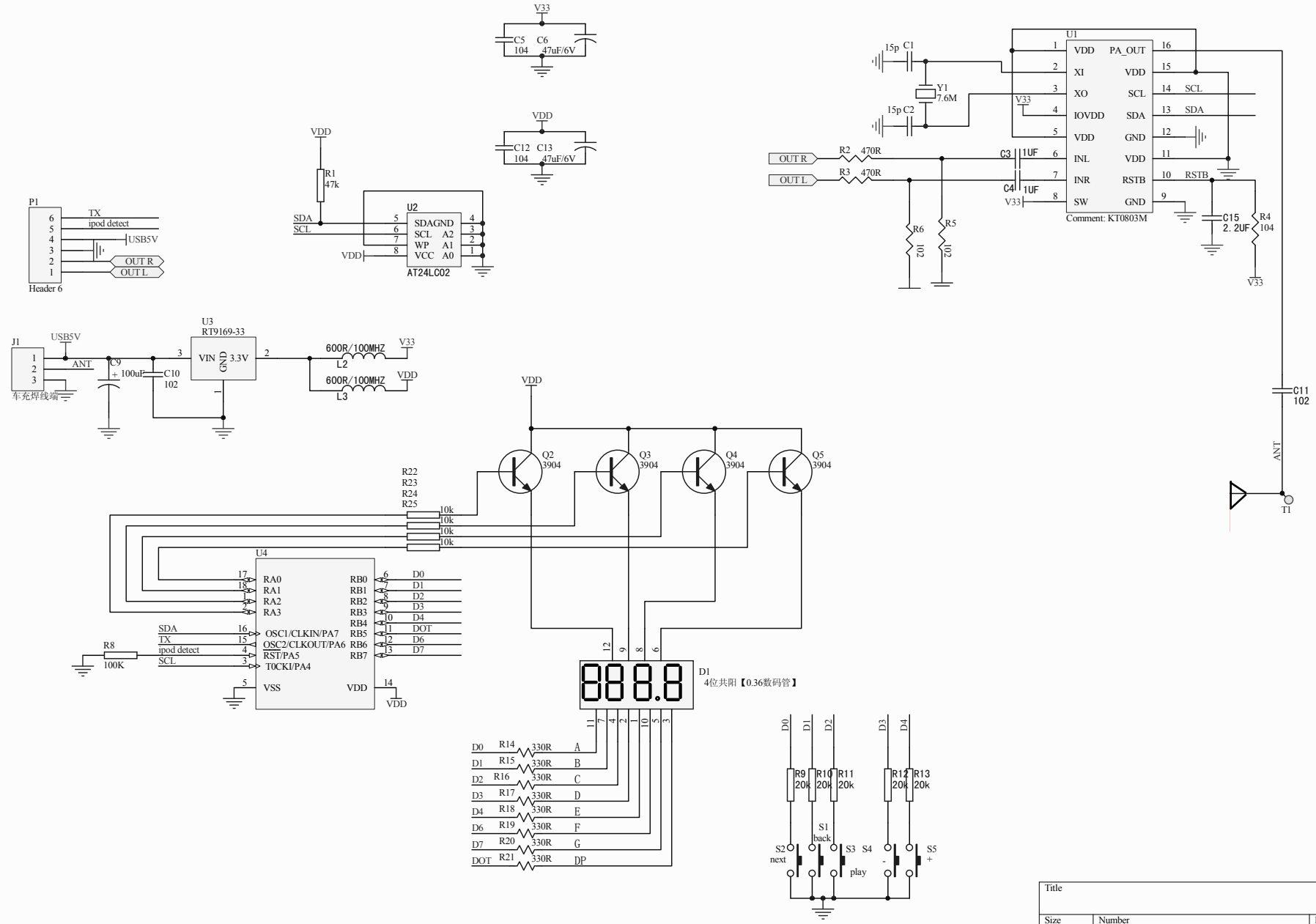

Title		
Size B	Number	Revision
Date: 2010-1-14		Sheet of
File: E:\康有公司\..\IPOD_FM发射器02.SchDoc		Drawn By:

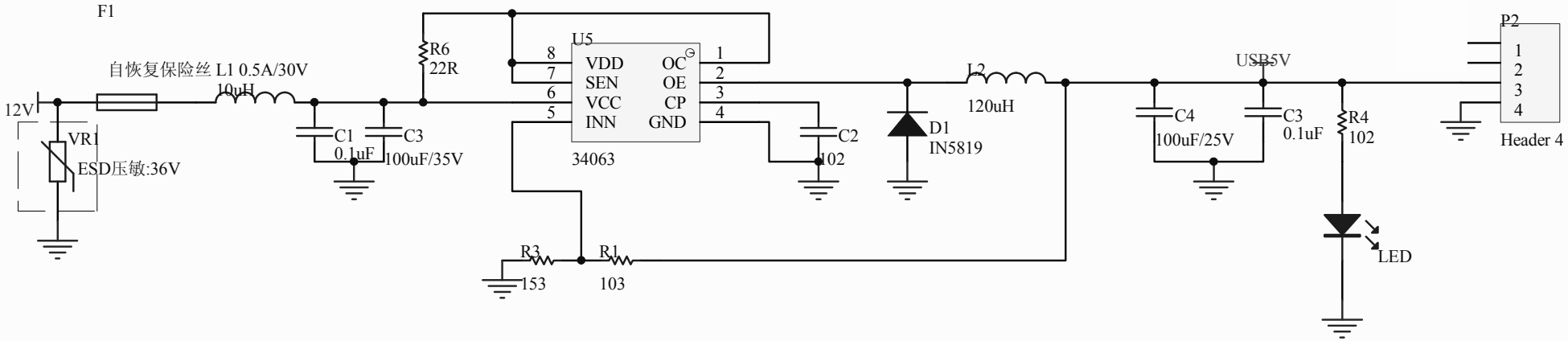

Title		
Size A2	Number	Revision
Date: 2010-4-3		Sheet of
File: E:\康有公司\车充01\车充.SCHDOC		Drawn By: