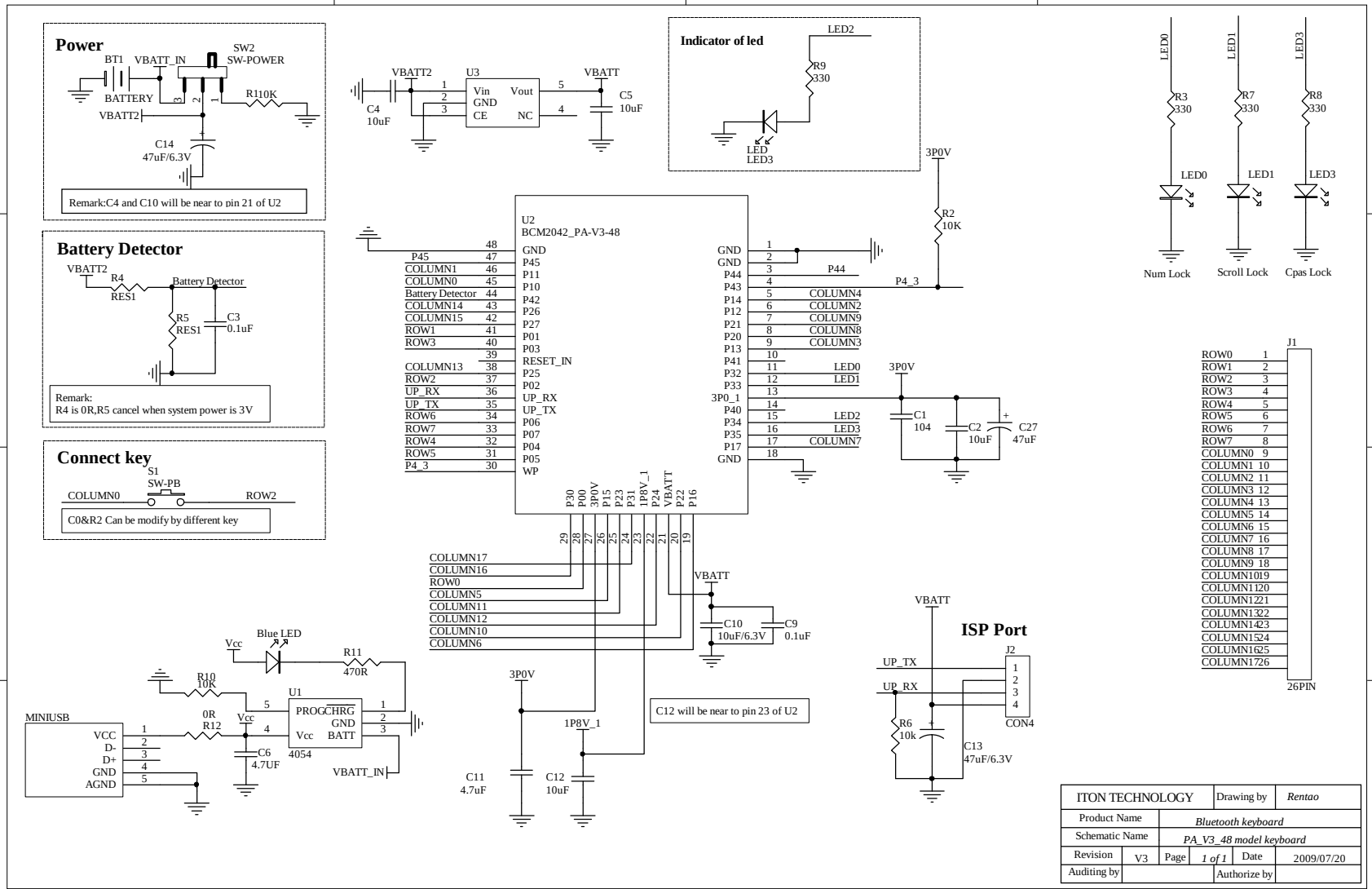
Power
BT1
VBATT_IN
SW2
SW-POWER
BATTERY
R110K
VBATT2
C14
47uF/6.3V
Remark:C4 and C10 will be near to pin 21 of U2
Battery Detector
VBATT2
R4
RES1
Battery Detector
R5
RES1
C3
0.1uF
Remark:
R4 is 0R,R5 cancel when system power is 3V
Connect key
S1
SW-PB
COLUMN0
ROW2
C0&R2 Can be modify by different key
VBATT2
U3
Vin
GND
CE
Vout
NC
VBATT
C4
10uF
C5
10uF
Indicator of led
LED2
R9
330
LED
LED3
3P0V
R2
10K
U2
BCM2042_PA-V3-48
GND
P45
P11
P10
P42
P26
P27
P01
P03
RESET_IN
P25
P02
UP_RX
UP_TX
P06
P07
P04
P05
WP
P44
P43
P14
P12
P21
P20
P13
P41
P32
P33
3P0_1
P40
P34
P35
P17
P4_3
COLUMN1
COLUMN0
Battery Detector
COLUMN14
COLUMN15
ROW1
ROW3
COLUMN13
ROW2
UP_RX
UP_TX
ROW6
ROW7
ROW4
ROW5
P4_3
COLUMN4
COLUMN2
COLUMN9
COLUMN8
COLUMN3
LED0
LED1
LED2
LED3
COLUMN7
P30
P00
3P0V
P15
P23
P31
1P8V_1
P24
VBATT
P22
P16
COLUMN17
COLUMN16
ROW0
COLUMN5
COLUMN11
COLUMN12
COLUMN10
COLUMN6
C1
104
C2
10uF
C27
47uF
VBATT
C10
10uF/6.3V
C9
0.1uF
C12 will be near to pin 23 of U2
3P0V
1P8V_1
C11
4.7uF
C12
10uF
Blue LED
Vcc
R11
470R
R10
10K
U1
PROG
CHRG
GND
Vcc
BATT
4054
MINIUSB
VCC
D-
D+
GND
AGND
0R
R12
Vcc
C6
4.7UF
VBATT_IN
LED0
LED1
LED3
R3
330
R7
330
R8
330
Num Lock
Scroll Lock
Cpas Lock
J1
ROW0
ROW1
ROW2
ROW3
ROW4
ROW5
ROW6
ROW7
COLUMN0
COLUMN1
COLUMN2
COLUMN3
COLUMN4
COLUMN5
COLUMN6
COLUMN7
COLUMN8
COLUMN9
COLUMN10
COLUMN11
COLUMN12
COLUMN13
COLUMN14
COLUMN15
COLUMN16
26PIN
ISP Port
VBATT
J2
UP_TX
UP_RX
CON4
R6
10k
C13
47uF/6.3V
ITON TECHNOLOGY
Drawing by
Rentao
Product Name
Bluetooth keyboard
Schematic Name
PA_V3_48 model keyboard
Revision
V3
Page
1 of 1
Date
2009/07/20
Auditing by
Authorize by