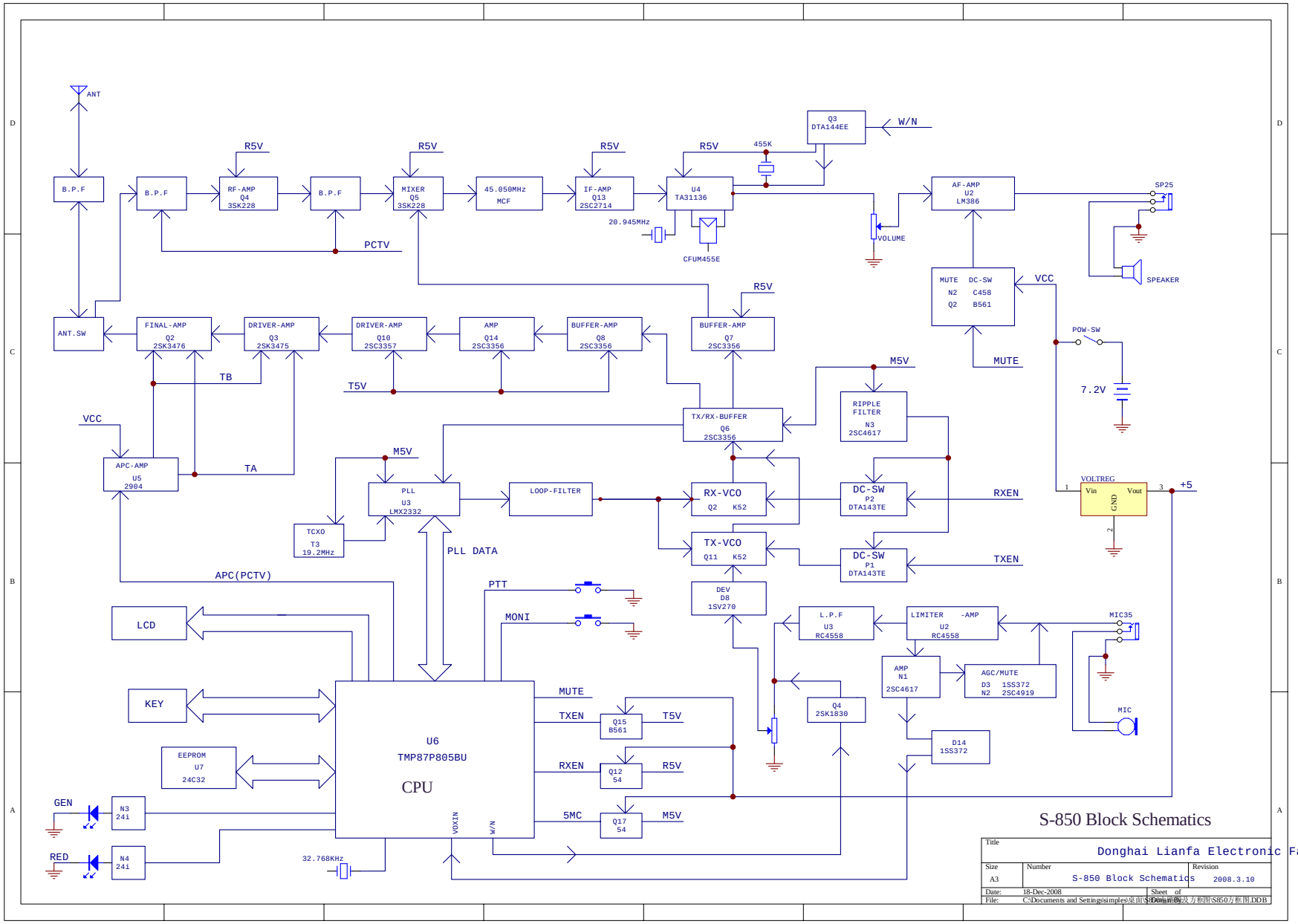

S-850 Block Schematics

Title	Donghai Lianfa Electronic Factory	
Size A3	Number S-850 Block Schematics	Revision 2008.3.10
Date: 18-Dec-2008	Sheet of	
File: C:\Documents and Settings\simples\桌面\S850方框图\S850方框图.DDB	Drawn By:	