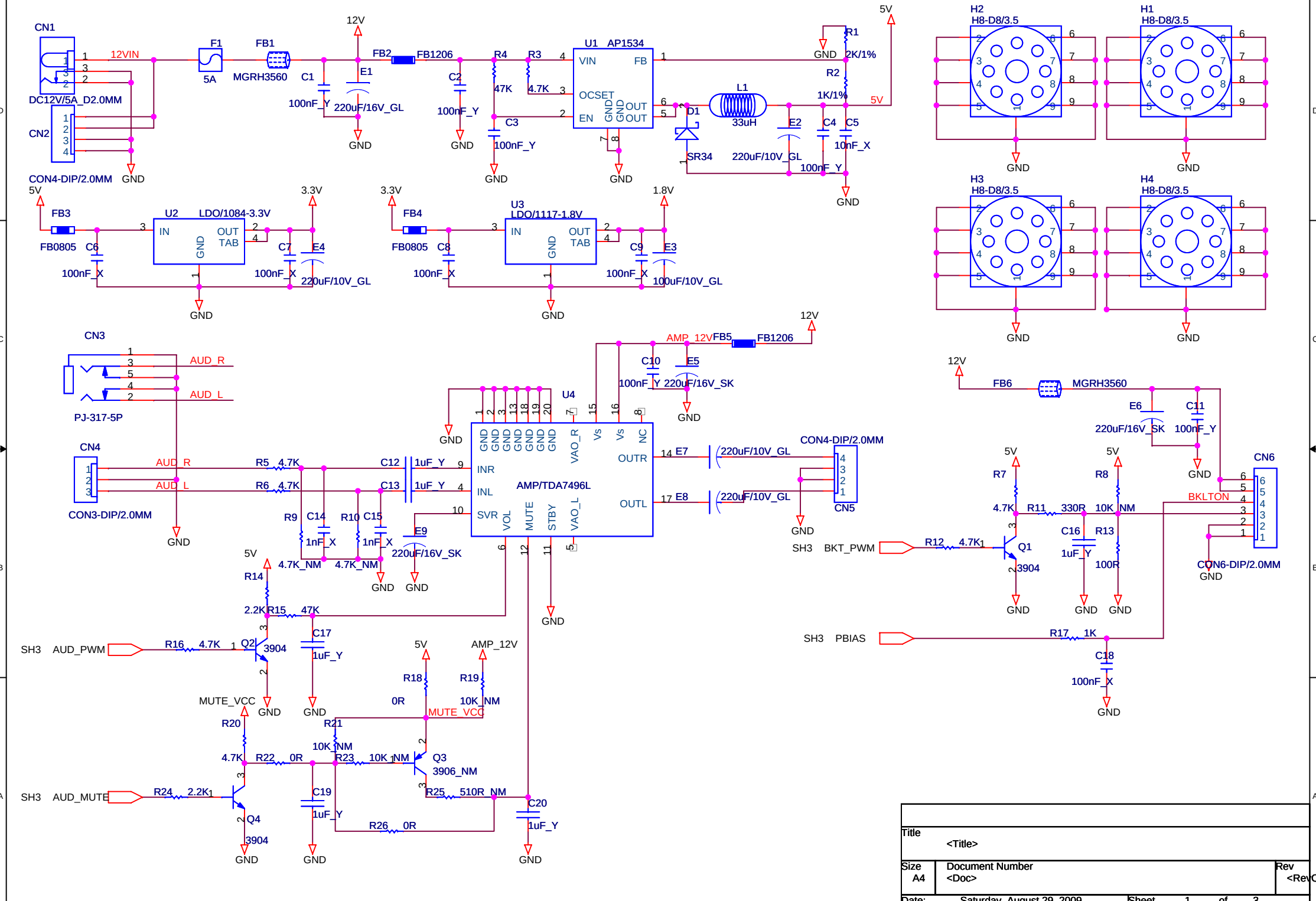

Title	<Title>	
Size A4	Document Number <Doc>	Rev <RevCo
Date: Saturday, August 29, 2009	Sheet 1 of 3	

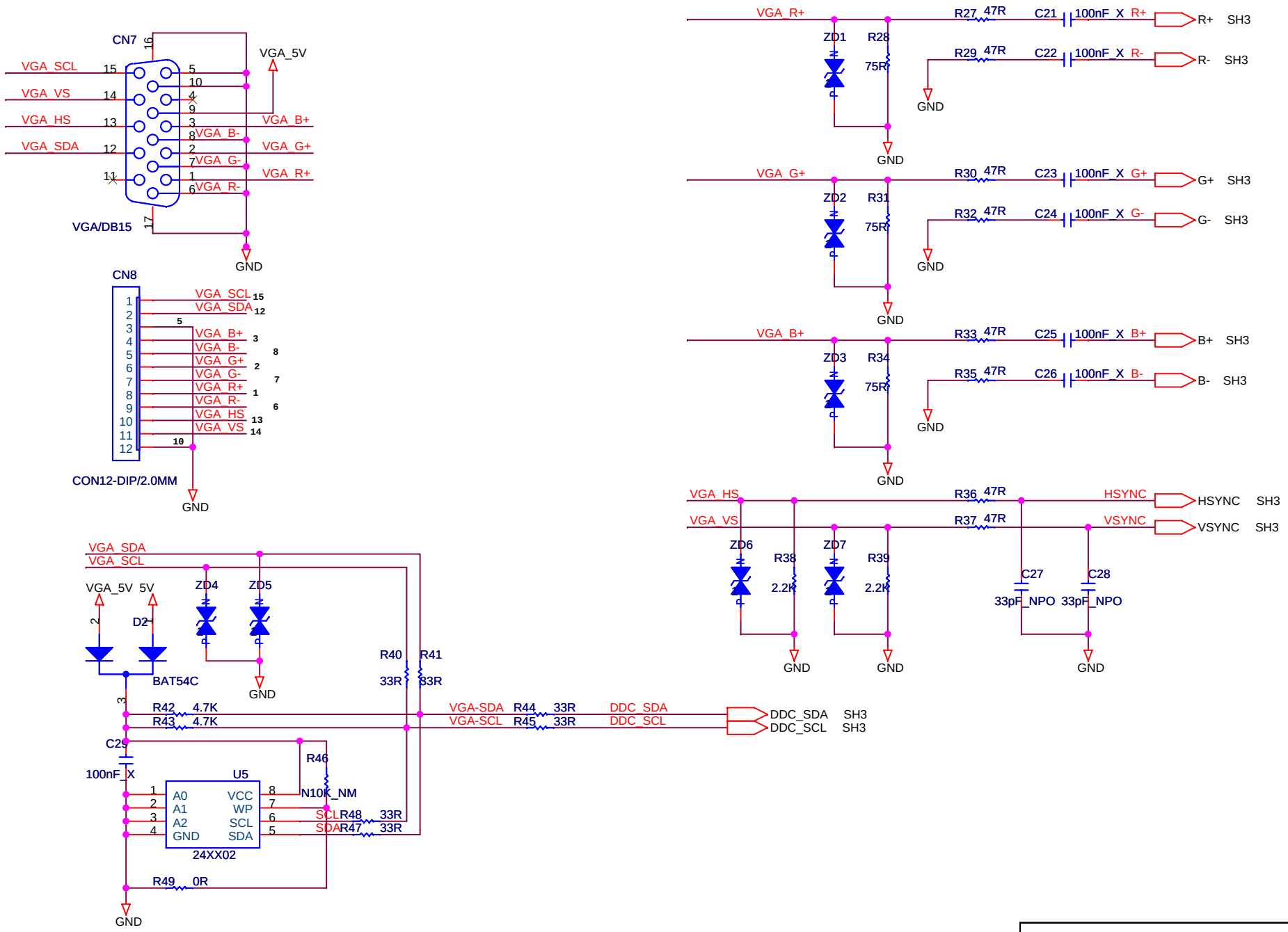

Title	<Title>	
Size A4	Document Number <Doc>	Rev <RevCo
Date: Saturday, August 29, 2009	Sheet 2 of 3	

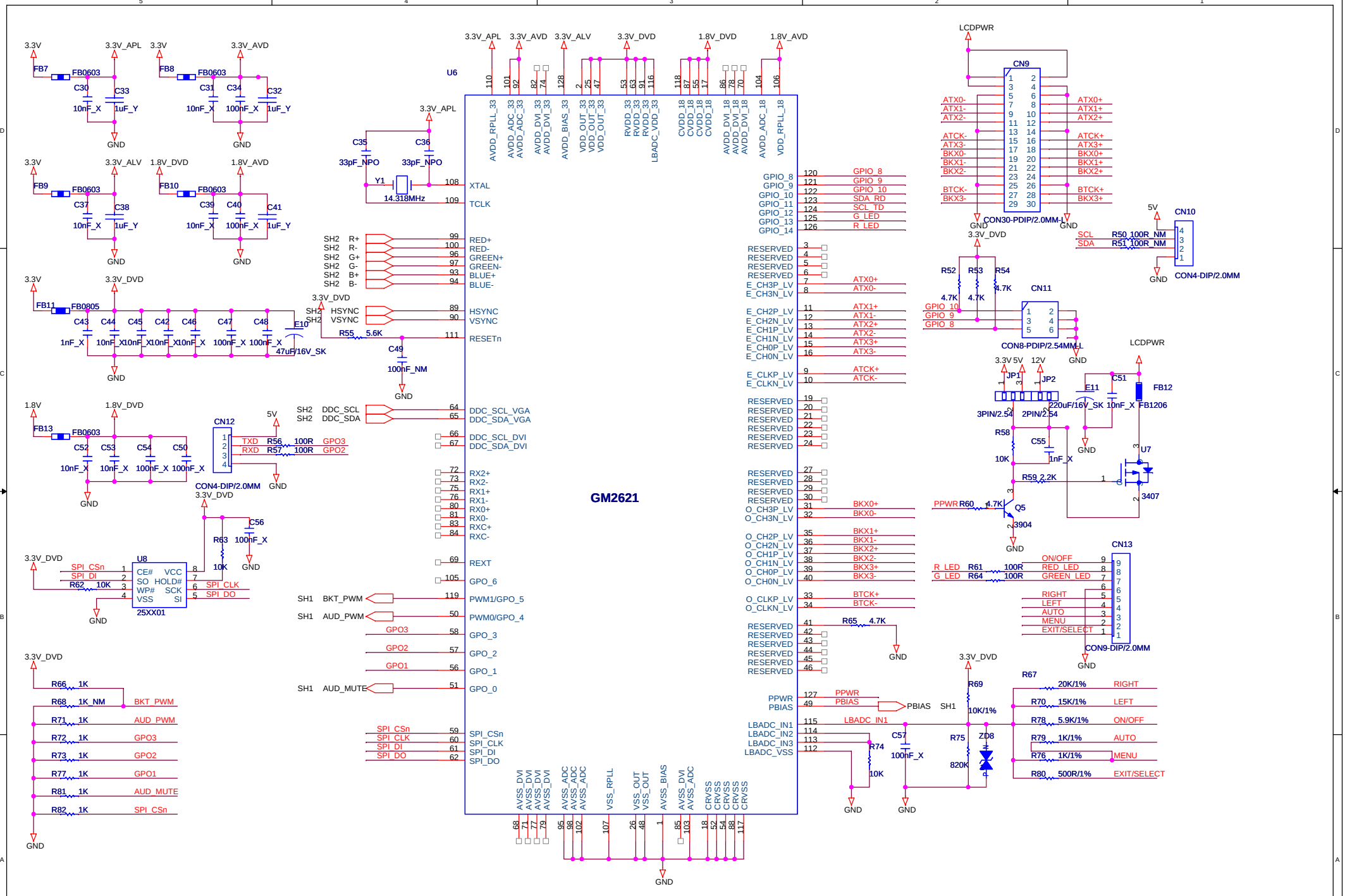

Title	<Title>
Size	Custom
Document Number	<Doc>
Rev	<RevCode>
Date:	Saturday, August 29, 2009
Sheet	3 of 3