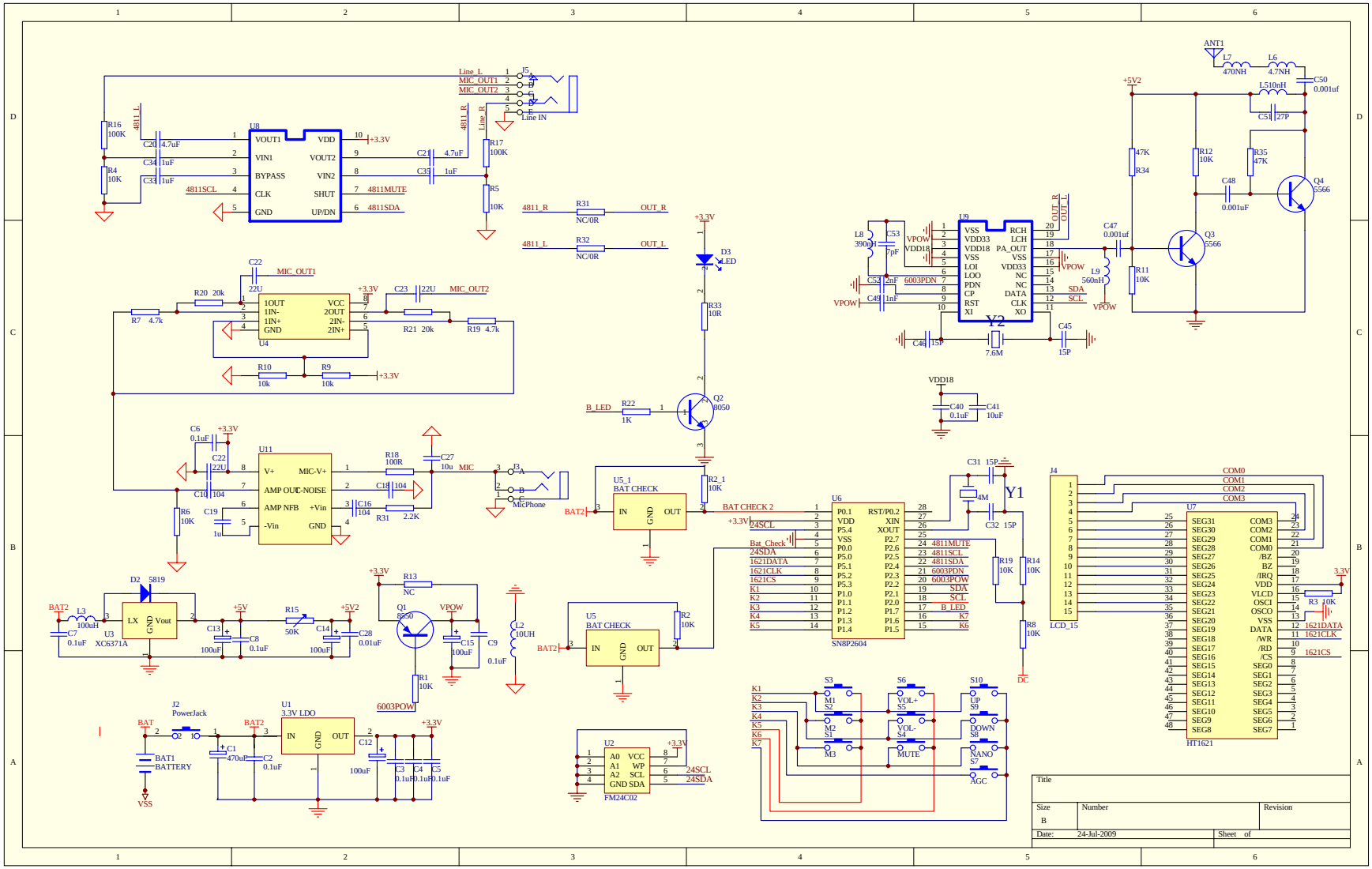
U8
VOUT1
VIN1
BYPASS
CLK
GND
VDD
VOUT2
VIN2
SHUT
UP/DN
4811SCL
4811MUTE
4811SDA
Line_L
MIC_OUT1
MIC_OUT2
Line_R
Line IN
R16 100K
R4 10K
C20 4.7uF
C34 1uF
C33 1uF
R17 100K
R5 10K
C21 4.7uF
C35 1uF
4811_R
4811_L
R31 NC/0R
R32 NC/0R
OUT_R
OUT_L
U4
1OUT
1IN-
1IN+
GND
VCC
2OUT
2IN-
2IN+
C22 22U
C23 22U
R20 20k
R21 20k
R7 4.7k
R19 4.7k
R10 10k
R9 10k
D3 LED
R33 10R
Q2 8050
B_LED
R22 1K
U11
V+
AMP OUT
AMP NFB
-Vin
MIC-V+
C-NOISE
+Vin
GND
C6 0.1uF
C10 104
C19 1u
R6 10K
R18 100R
C18 104
C16 104
R31 2.2K
C27 10u
MIC
J3
MicPhone
U5_1
BAT CHECK
IN
GND
OUT
BAT2
R2_1 10K
BAT CHECK 2
24SCL
Bat_Check
24SDA
1621DATA
1621CLK
1621CS
K1
K2
K3
K4
K5
U6
SN8P2604
P0.1
VDD
P5.4
VSS
P0.0
P5.0
P5.1
P5.2
P5.3
P1.0
P1.1
P1.2
P1.3
P1.4
RST/P0.2
XIN
XOUT
P2.7
P2.6
P2.5
P2.4
P2.3
P2.2
P2.1
P2.0
P1.7
P1.6
P1.5
4811MUTE
4811SCL
4811SDA
6003PDN
6003POW
SDA
SCL
B_LED
K6
K7
C31 15P
4M
C32 15P
Y1
R19 10K
R14 10K
R8 10K
DC
U7
SEG31
SEG30
SEG29
SEG28
SEG27
SEG26
SEG25
SEG24
SEG23
SEG22
SEG21
SEG20
SEG19
SEG18
SEG17
SEG16
SEG15
SEG14
SEG13
SEG12
SEG11
SEG10
SEG9
SEG8
COM3
COM2
COM1
COM0
/BZ
BZ
/IRQ
VDD
VLCD
OSCI
OSCO
VSS
DATA
/WR
/RD
/CS
SEG0
SEG1
SEG2
SEG3
SEG4
SEG5
SEG6
SEG7
HT1621
J4
LCD_15
3.3V
R3 10K
ANT1
L7 470NH
L6 4.7NH
L5 10nH
C50 0.001uf
C51 27P
+5V2
R34 47K
R12 10K
R35 47K
C48 0.001uF
Q4 5566
Q3 5566
C47 0.001uf
R11 10K
L8 390nH
C53 7pF
C52 2nF
C49 1nF
6003PDN
VPOW
VDD18
U9
VSS
VDD33
VDD18
VSS
LOI
LOO
PDN
CP
RST
XI
RCH
LCH
PA_OUT
VSS
VDD33
NC
NC
DATA
CLK
XO
OUT_R
OUT_L
L9 560nH
SDA
SCL
Y2
7.6M
C46 15P
C45 15P
VDD18
C40 0.1uF
C41 10uF
D2 5819
BAT2
L3 100uH
C7 0.1uF
U3 XC6371A
LX
Vout
GND
+5V
C13 100uF
C8 0.1uF
R15 50K
C14 100uF
C28 0.01uF
+5V2
R13 NC
Q1 8550
VPOW
C15 100uF
C9 0.1uF
R1 10K
6003POW
L2 10UH
U5
BAT CHECK
R2 10K
J2 PowerJack
BAT
BAT1 BATTERY
VSS
U1 3.3V LDO
C1 470uF
C2 0.1uF
C12 100uF
C3 0.1uF
C4 0.1uF
C5 0.1uF
U2
FM24C02
A0
A1
A2
GND
VCC
WP
SCL
SDA
24SCL
24SDA
S3
M1
S2
M2
S1
M3
S6
VOL+
S5
VOL-
S4
MUTE
S10
UP
S9
DOWN
S8
NANO
S7
AGC
Title
Size
B
Number
Revision
Date: 24-Jul-2009
Sheet of