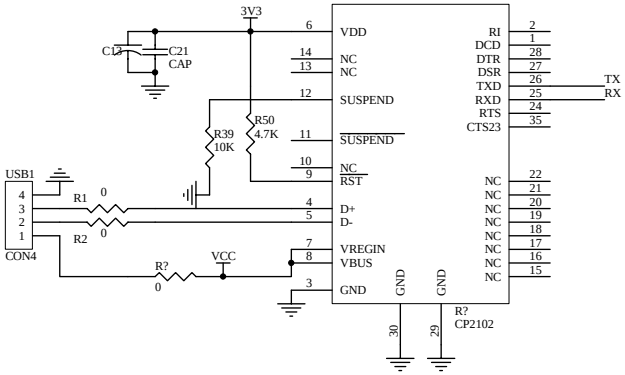
3V3
C12
C21
CAP
R39
10K
R50
4.7K
USB1
CON4
R1
0
R2
0
R?
0
VCC
VDD
NC
NC
SUSPEND
SUSPEND
NC
RST
D+
D-
VREGIN
VBUS
GND
GND
GND
RI
DCD
DTR
DSR
TXD
RXD
RTS
CTS23
TX
RX
R?
CP2102

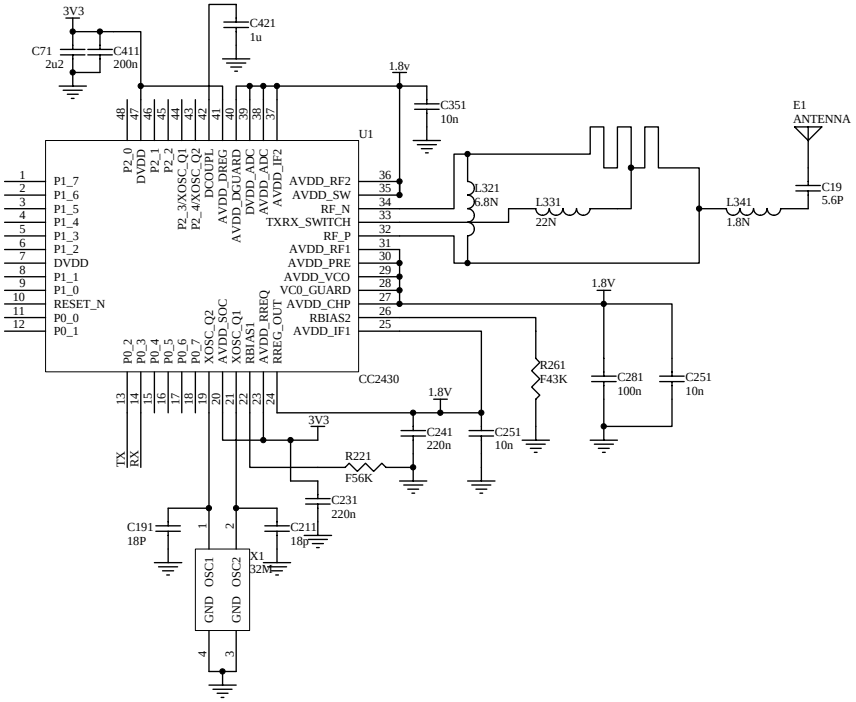
3V3
C71
2u2
C411
200n
C421
1u
1.8v
C351
10n
U1
P2_0
DVDD
P2_1
P2_2
P2_3XOSC_Q1
P2_4XOSC_Q2
DCOUPL
AVDD_DREG
AVDD_DGUARD
DVDD_ADC
AVDD_ADC
AVDD_IF2
P1_7
P1_6
P1_5
P1_4
P1_3
P1_2
DVDD
P1_1
P1_0
RESET_N
P0_0
P0_1
AVDD_RF2
AVDD_SW
RF_N
TXRX_SWITCH
RF_P
AVDD_RF1
AVDD_PRE
AVDD_VCO
VC0_GUARD
AVDD_CHP
RBIAS2
AVDD_IF1
P0_2
P0_3
P0_4
P0_5
P0_6
P0_7
XOSC_Q2
AVDD_SOC
XOSC_Q1
RBIAS1
AVDD_RREQ
RREG_OUT
CC2430
TX
RX
L321
6.8N
L331
22N
L341
1.8N
E1
ANTENNA
C19
5.6P
1.8V
R261
F43K
C281
100n
C251
10n
C241
220n
R221
F56K
C231
220n
C191
18P
C211
18p
X1
32M
OSC1
OSC2
GND
GND