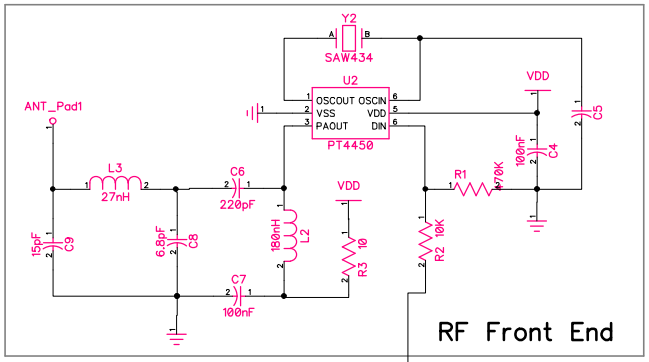

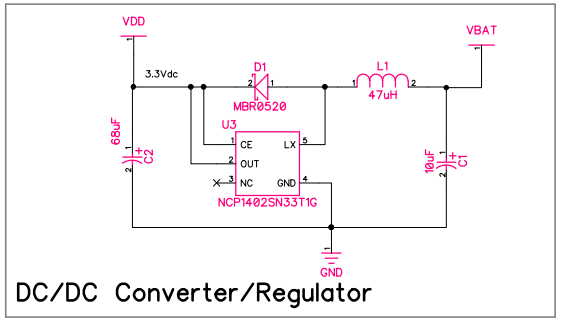

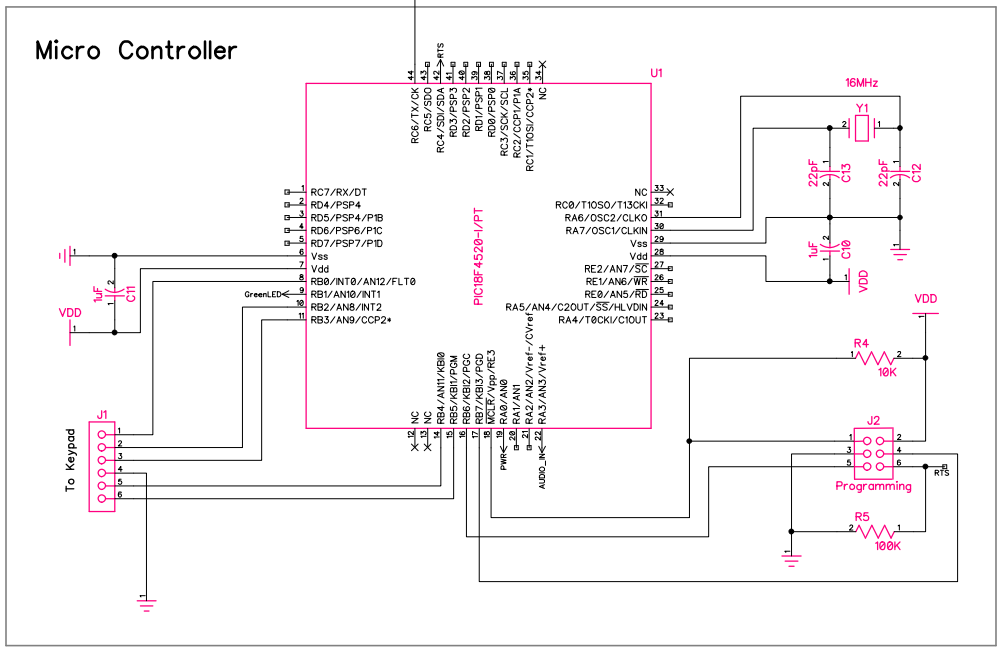

FCCID: X4USPC SCHEMATICS		
Size	Number	Rev 1.0
01/18/2010	Drawn by	
X4USPSC	Sheet	