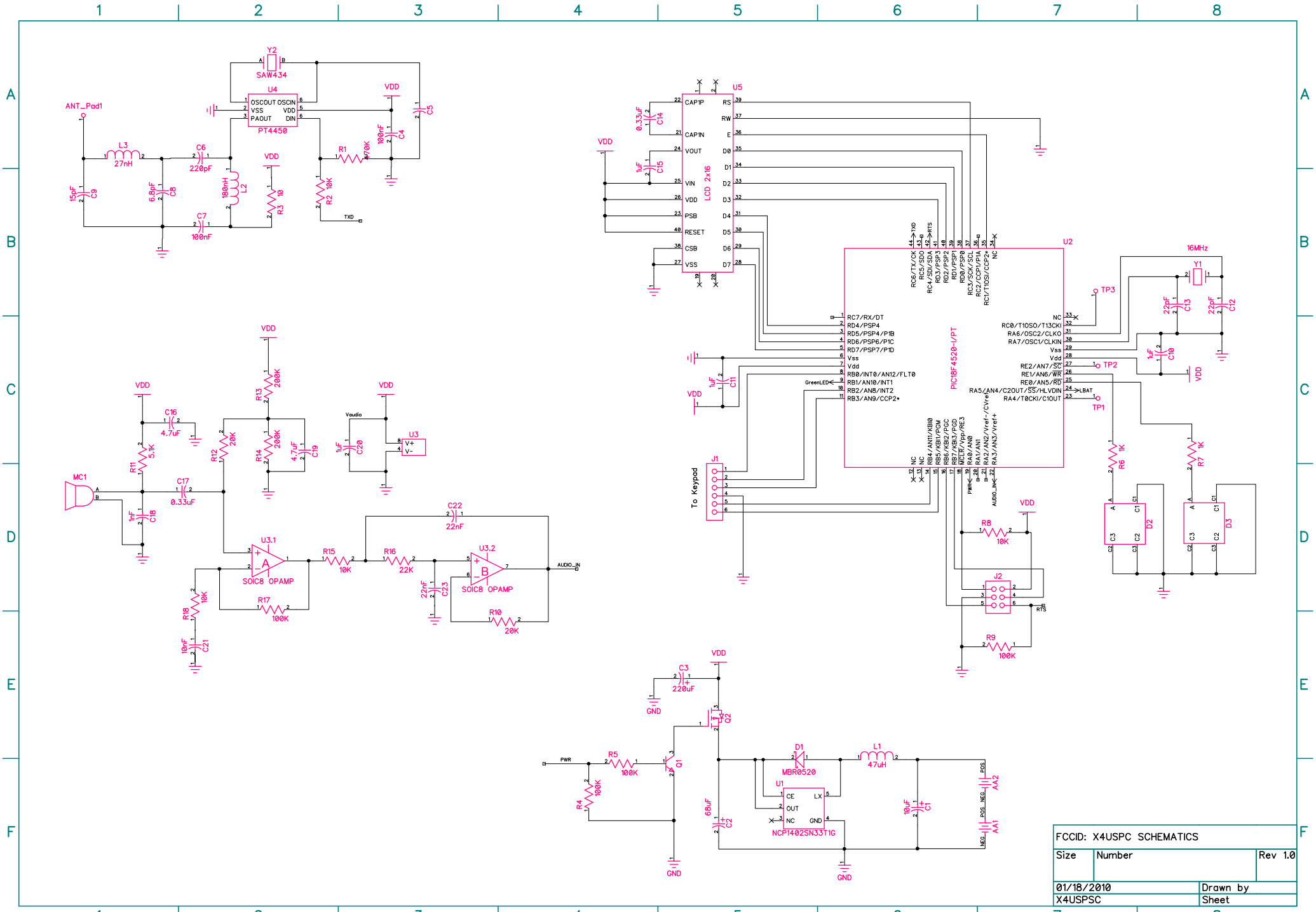
ANT_Pad1
L3
27nH
C6
220pF
15pF
C9
6.8pF
C8
180nH
L2
C7
100nF
Y2
SAW434
U4
OSCOUT OSCIN
VSS VDD
PAOUT DIN
PT4450
VDD
R3
10
R1
470K
R2
10K
100nF
C4
C5
TXD
U5
LCD 2x16
CAP1P
CAP1N
VOUT
VIN
VDD
PSB
RESET
CSB
VSS
RS
RW
E
D0
D1
D2
D3
D4
D5
D6
D7
0.33uF
C14
1uF
C15
U2
PIC16F4520-I/PT
RC7/RX/DT
RD4/PSP4
RD5/PSP4/P1B
RD6/PSP6/P1C
RD7/PSP7/P1D
Vss
Vdd
RB0/INT0/AN12/FLT0
RB1/AN10/INT1
RB2/AN8/INT2
RB3/AN9/CCP2*
GreenLED
NC
RC0/T1OSO/T13CKI
RA6/OSC2/CLKO
RA7/OSC1/CLKIN
RE2/AN7/SC
RE1/AN6/WR
RE0/AN5/RD
RA5/AN4/C2OUT/SS/HLVDIN
RA4/T0CKI/C1OUT
LBAT
TP1
TP2
TP3
16MHz
Y1
22pF
C13
22pF
C12
1uF
C10
1uF
C11
J1
To Keypad
R8
10K
J2
RTS
R9
100K
R6
1K
R7
1K
D2
D3
MC1
C16
4.7uF
R11
5.1K
C17
0.33uF
1nF
C18
R12
20K
R13
200K
R14
200K
4.7uF
C19
Vaudio
1uF
C20
U3
V+
V-
U3.1
SOIC8 OPAMP
R15
10K
R16
22K
C22
22nF
U3.2
SOIC8 OPAMP
22nF
C23
R10
20K
AUDIO_IN
R18
10K
R17
100K
10nF
C21
C3
220uF
GND
Q2
PWR
R5
100K
R4
100K
Q1
68uF
C2
D1
MBR0520
U1
CE
OUT
NC
LX
GND
NCP1402SN33T1G
L1
47uH
10uF
C1
POS
NEG
AA2
AA1
FCCID: X4USPC SCHEMATICS
Size
Number
Rev 1.0
01/18/2010
Drawn by
X4USPSC
Sheet