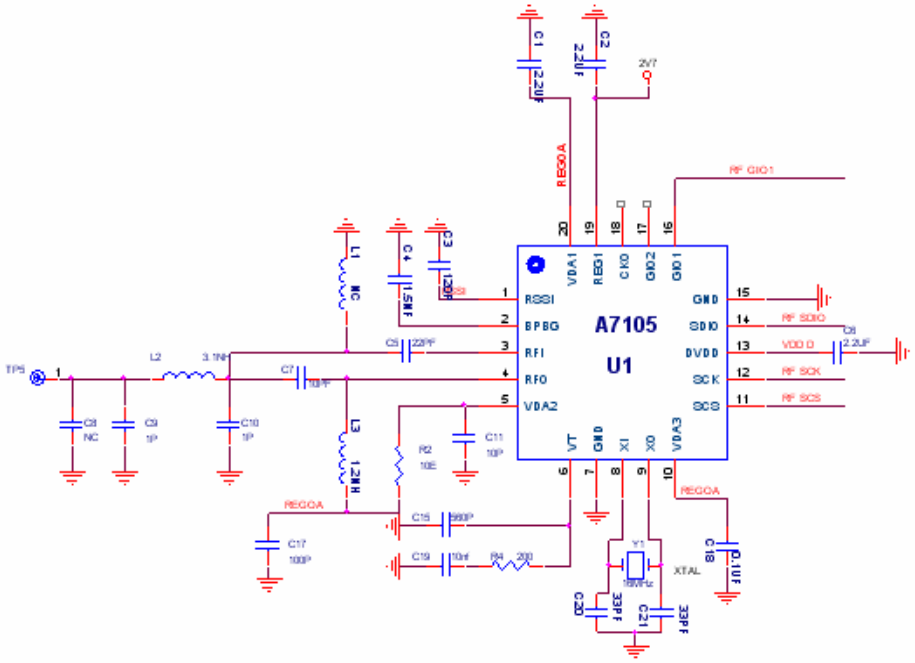
A7105
U1
RSSI
BPBG
RFI
RFO
VDA2
VDA1
REG1
CKO
GIO2
GIO1
GND
SDIO
DVDD
SCK
SCS
VDA3
XO
XI
VT
RF GIO1
RF SDIO
VDD D
RF SCK
RF SCS
REGOA
XTAL
TP5
2V7

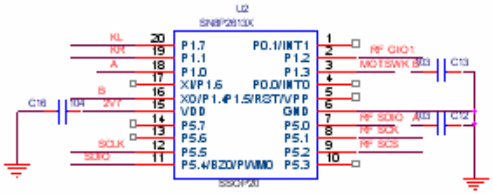
U2
SN8P2613X
SSOP20
P1.7
P1.1
P1.0
XI/P1.6
XO/P1.4/P1.5/RST/VPP
VDD
P5.7
P5.6
P5.5
P5.4/BZO/PWMO
P0.1/INT1
P1.2
P1.3
P0.0/INT0
GND
P5.0
P5.1
P5.2
P5.3
RF GIO1
MOTSWK
RF SDIO
RF SCK
RF SCS
KL
KR
A
B
SCLK
SDIO

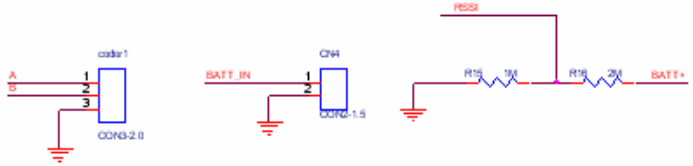
coder1
CON3-2.0
CN4
CON2-1.5
BATT_IN
RSSI
BATT+

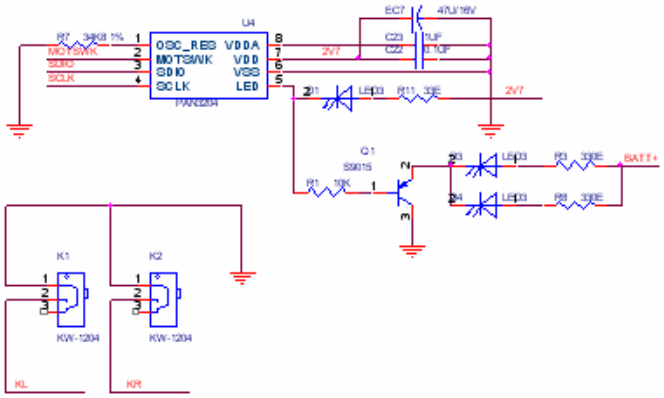
U4
PAN3204
OSC_REG
MOTSWK
SDIO
SCLK
VDDA
VDD
VSS
LED
MOTSWK
SDIO
SCLK
2V7
Q1
S9015
BATT+
K1
K2
KW-1204
KL
KR

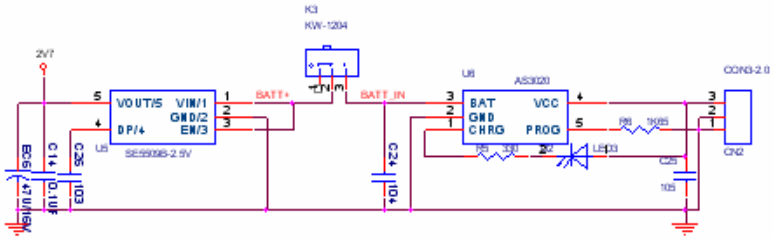
K3
KW-1204
2V7
U5
SE550S5-2.5V
VOUT/5
VIN/1
GND/2
EN/3
DP/4
BATT+
BATT_IN
U6
AS3020
BAT
GND
CHRG
VCC
PROG
CON3-2.0
CN2