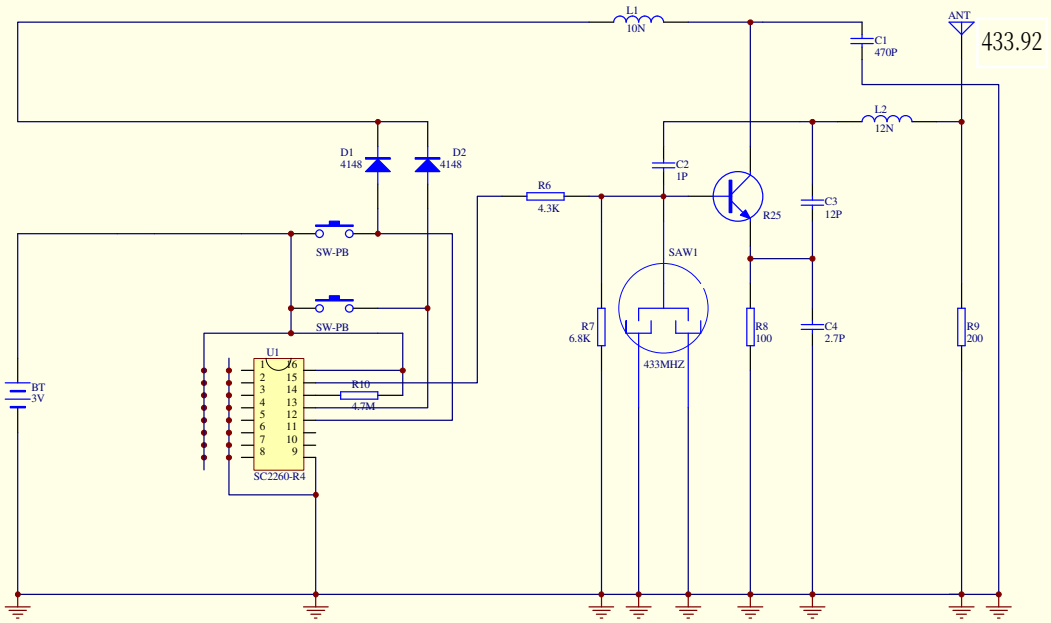

Title		
Size B	Number	Revision
Date: 16-Jan-2010	Sheet of	
File: D:\宝翔技术部\射频技术部\特度\特度.DDB	Drawn By:	