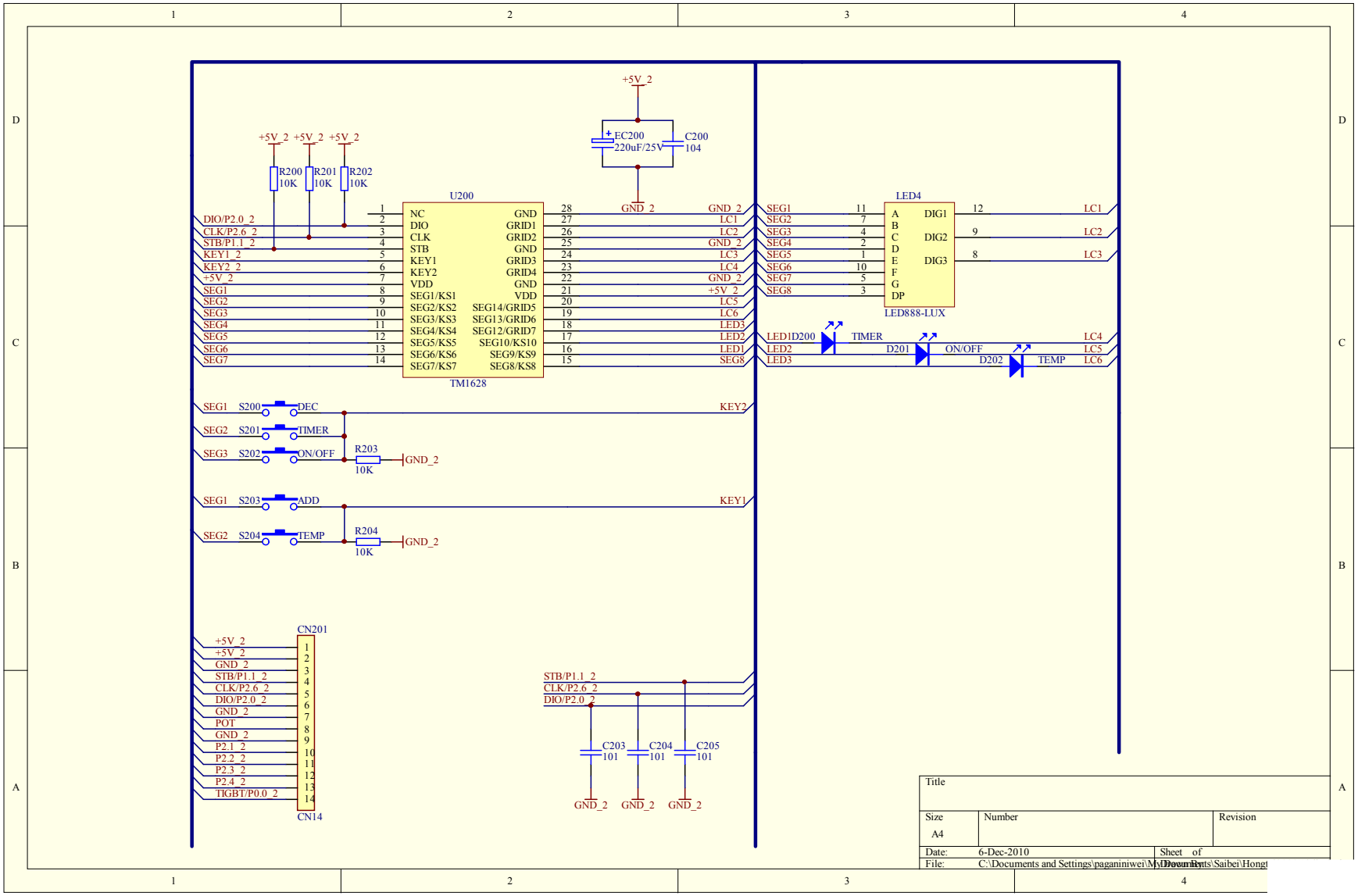
+5V_2
EC200
220uF/25V
C200
104
GND_2
+5V_2 +5V_2 +5V_2
R200
10K
R201
10K
R202
10K
U200
TM1628
NC
DIO
CLK
STB
KEY1
KEY2
VDD
SEG1/KS1
SEG2/KS2
SEG3/KS3
SEG4/KS4
SEG5/KS5
SEG6/KS6
SEG7/KS7
GND
GRID1
GRID2
GND
GRID3
GRID4
GND
VDD
SEG14/GRID5
SEG13/GRID6
SEG12/GRID7
SEG10/KS10
SEG9/KS9
SEG8/KS8
DIO/P2.0_2
CLK/P2.6_2
STB/P1.1_2
KEY1_2
KEY2_2
+5V_2
SEG1
SEG2
SEG3
SEG4
SEG5
SEG6
SEG7
GND_2
LC1
LC2
GND_2
LC3
LC4
GND_2
+5V_2
LC5
LC6
LED3
LED2
LED1
SEG8
LED4
LED888-LUX
A
B
C
D
E
F
G
DP
DIG1
DIG2
DIG3
LC1
LC2
LC3
LED1D200
TIMER
D201
ON/OFF
D202
TEMP
LC4
LC5
LC6
S200
DEC
KEY2
S201
TIMER
S202
ON/OFF
R203
10K
S203
ADD
KEY1
S204
TEMP
R204
10K
CN201
CN14
+5V_2
GND_2
STB/P1.1_2
CLK/P2.6_2
DIO/P2.0_2
POT
P2.1_2
P2.2_2
P2.3_2
P2.4_2
TIGBT/P0.0_2
C203
101
C204
101
C205
101
Title
Size
A4
Number
Revision
Date:
6-Dec-2010
Sheet of
File:
C:\Documents and Settings\paganiniwei\My Documents\Saibei\Hongt

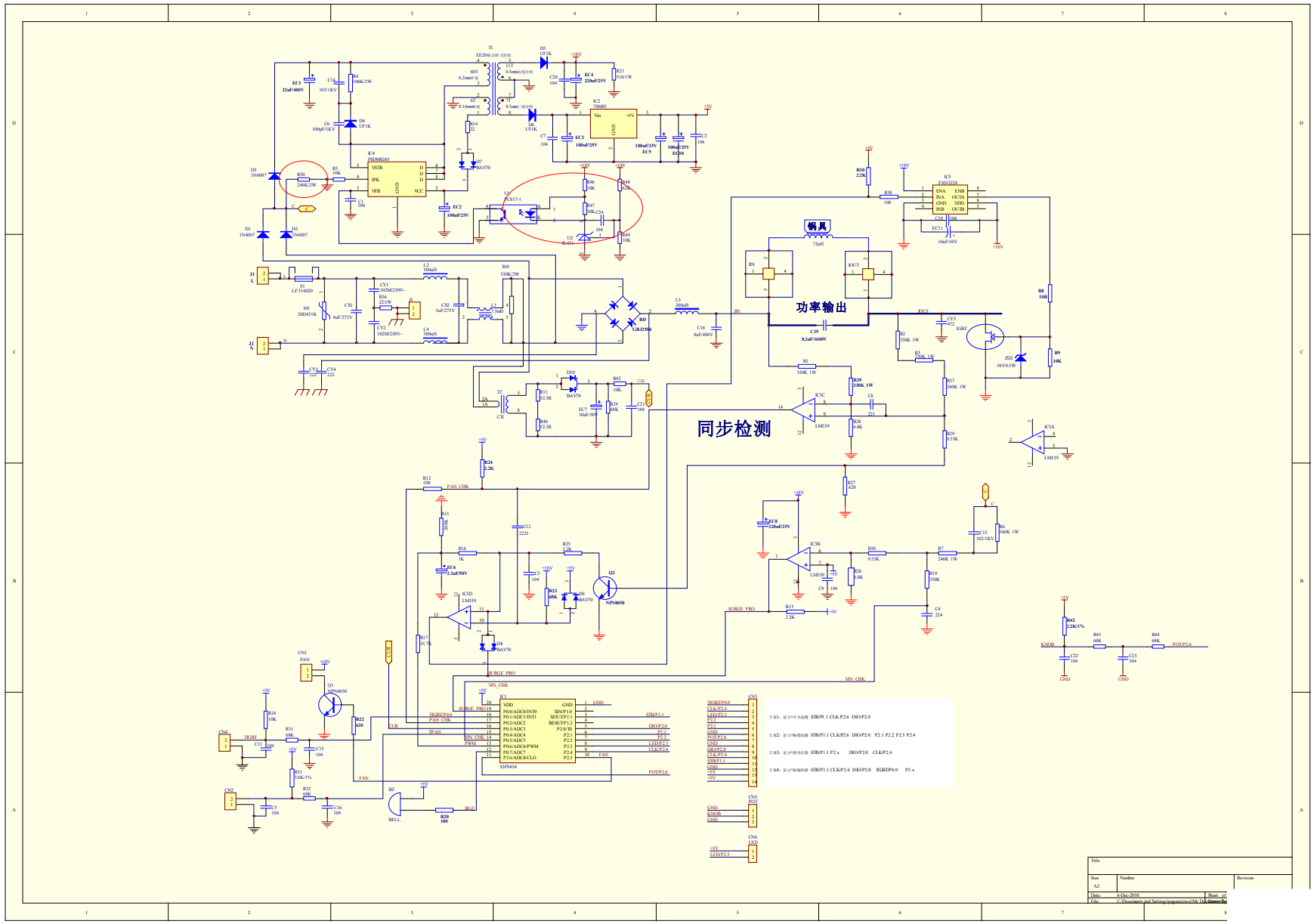
功率输出
同步检测
铜具
方案1：显示灯开关按键 STB/P1.1 CLK/P2.6 DIO/P2.0
方案2：显示灯触摸按键 STB/P1.1 CLK/P2.6 DIO/P2.0 P2.1 P2.2 P2.3 P2.4
方案3：显示灯旋钮按键 STB/P1.1 P2.x DIO/P2.0 CLK/P2.6
方案4：显示灯旋编码器 STB/P1.1 CLK/P2.6 DIO/P2.0 TGBTP0.0 P2.x
Title
Size A2
Number
Revision
Date: 6-Dec-2010
Sheet of