F antenna for Epoke a/s RX001 radio module

(From Freescale semiconductor “Compact Integrated Antenna Application note, Rev 1.4”, AN2731.pdf, section 8.1)

The following figure shows an F-antenna. Measurements are in millimetres.

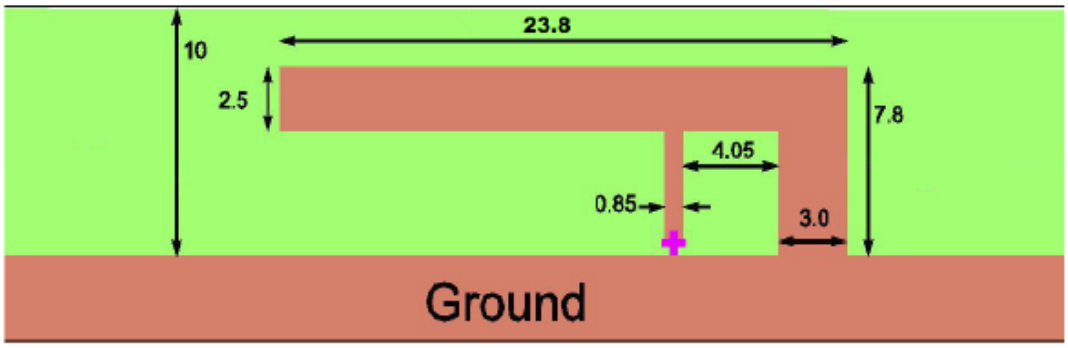

Figure 11. F Antenna

Figure 12 shows the EVK horizontal PCB radiation pattern. Red represents vertical polarization and blue represents horizontal polarization both measured in dBi.

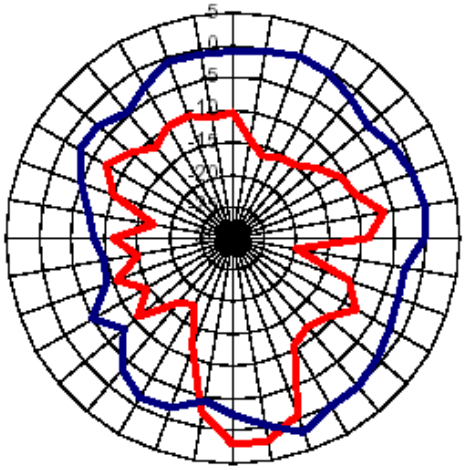

Figure 12. F-Antenna Radiation Pattern (For Antenna as Shown in Figure 11)

Figure 13 shows a typical plot of the return loss and bandwidth obtainable with an F-antenna. A slight ripple is caused by the ground plane size.

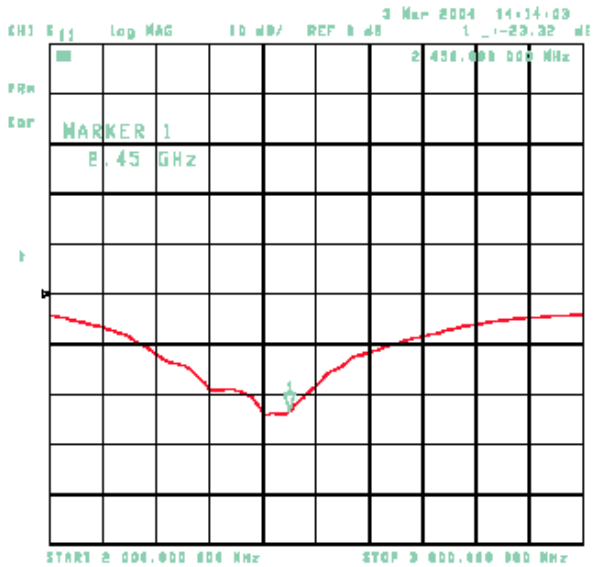

Figure 13. F Antenna Return Loss and Bandwidth

2,4GHz Omni Antenna

1dBi Part no. 2,4-SO-0

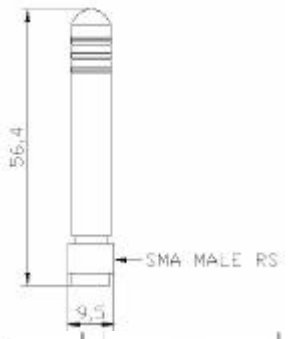

Electrical Specifications:

Frequency Range:	2,4-2,4835GHz
VSWR:	=2,0
Impedance:	50ohm ±5
Forward Gain:	1dBi
Polarization:	Vertical
Power Handling:	1 Watt
Beam Width:	H: 360° / E: 43,3°

Mechanical Specifications:

Connector:	RPSMA male
Operation Temp.:	-30°C ~+60°C
Material Radome:	PU
Base:	Brass
Dimension:	Ø:9,5mm / L:56,4mm
Weight:	6g ±2g (w/ mount)
Color:	Black

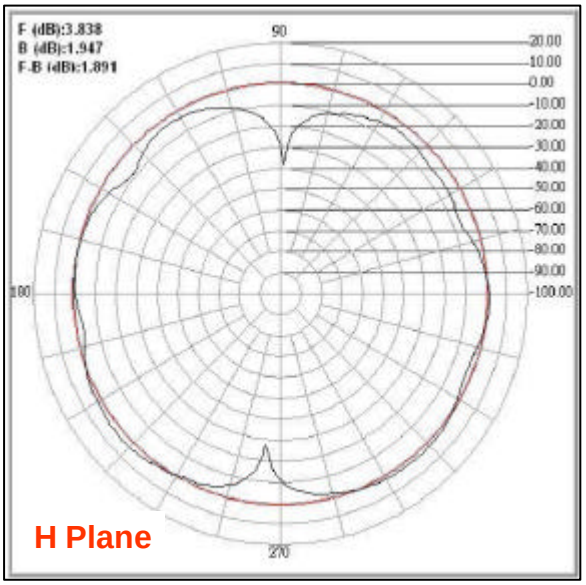

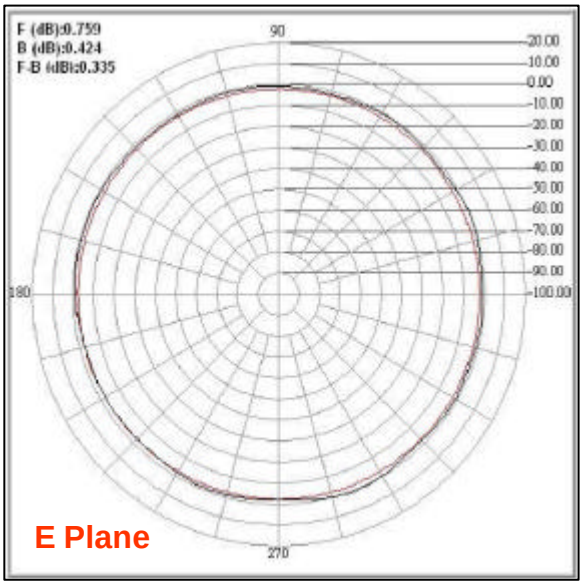

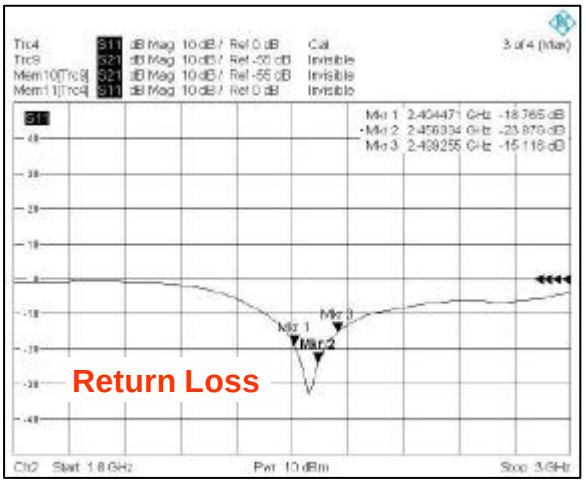

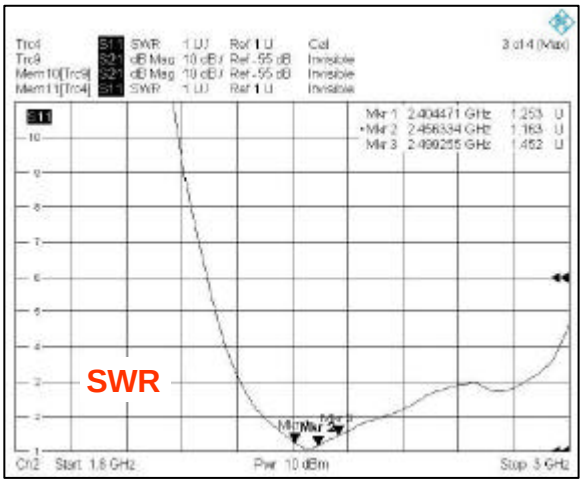

Dansk Microbølge Teknik ApS
Energivej 13
9300 Saeby
Denmark

Tel.: +45 98461333
Fax: +45 98467877
E-mail: info@dmtonline.dk
Web: www.dmtonline.dk

2,4GHz Rubber Ant.

3dBi Part no. 2,4-RO-3-100

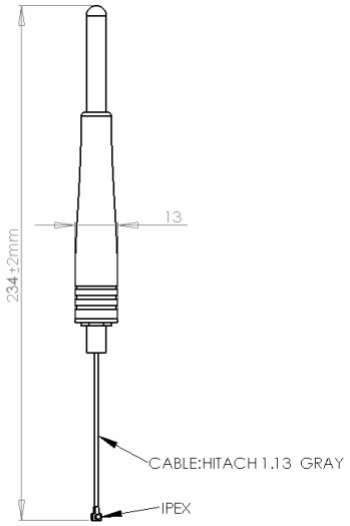

Electrical Specifications:

Frequency Range:	2,4-2,4835GHz
VSWR:	=2,0
Impedance:	50ohm ±5
Forward Gain:	3dBi
Polarization:	Vertical
Power Handling:	1 Watt
Beam Width:	H: 360° / E: 57,0°

Mechanical Specifications:

Connector:	RPSMA male
Operation Temp.:	-30°C ~+60°C
Material Radome:	ABS
Base:	Brass
Dimension:	Ø:13mm / L:240mm
Weight:	15g ±2g (w/ mount)
Color:	Black

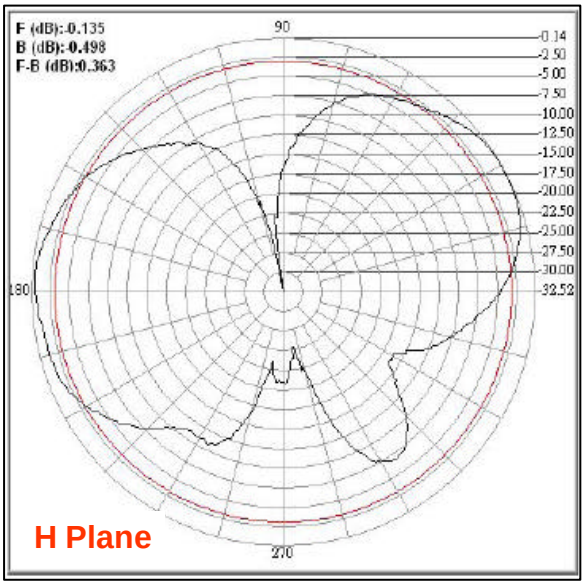

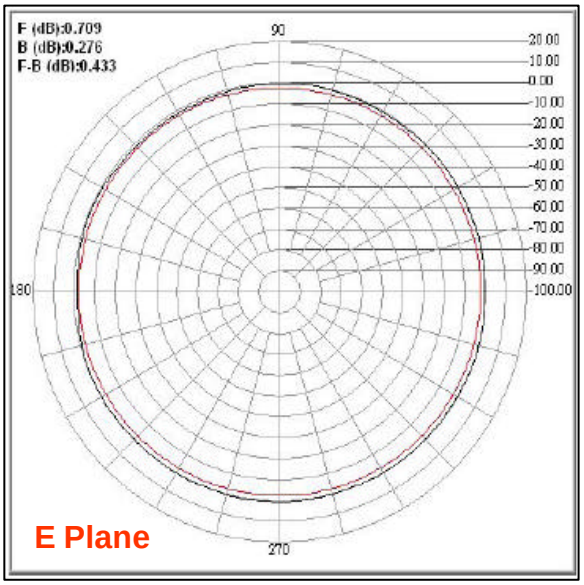

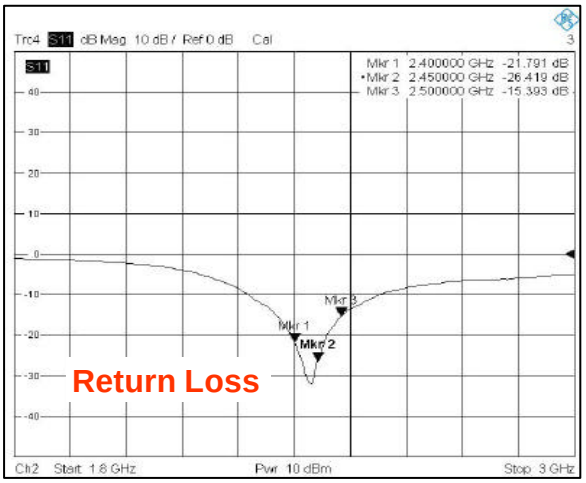

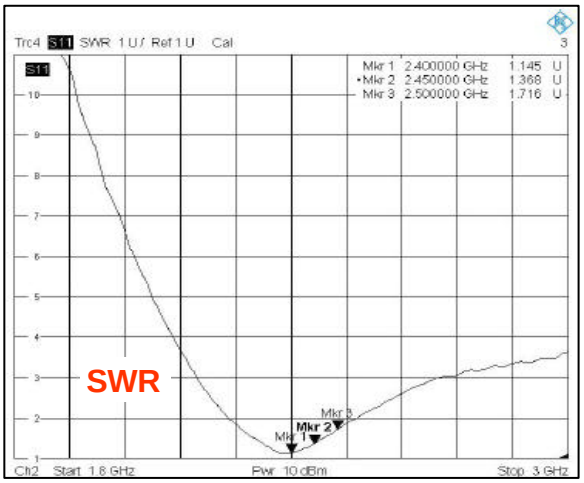

Dansk Microbølge Teknik ApS
Energivej 13
9300 Saeby
Denmark

Tel.: +45 98461333
Fax: +45 98467877
E-mail: info@dmtonline.dk
Web: www.dmtonline.dk