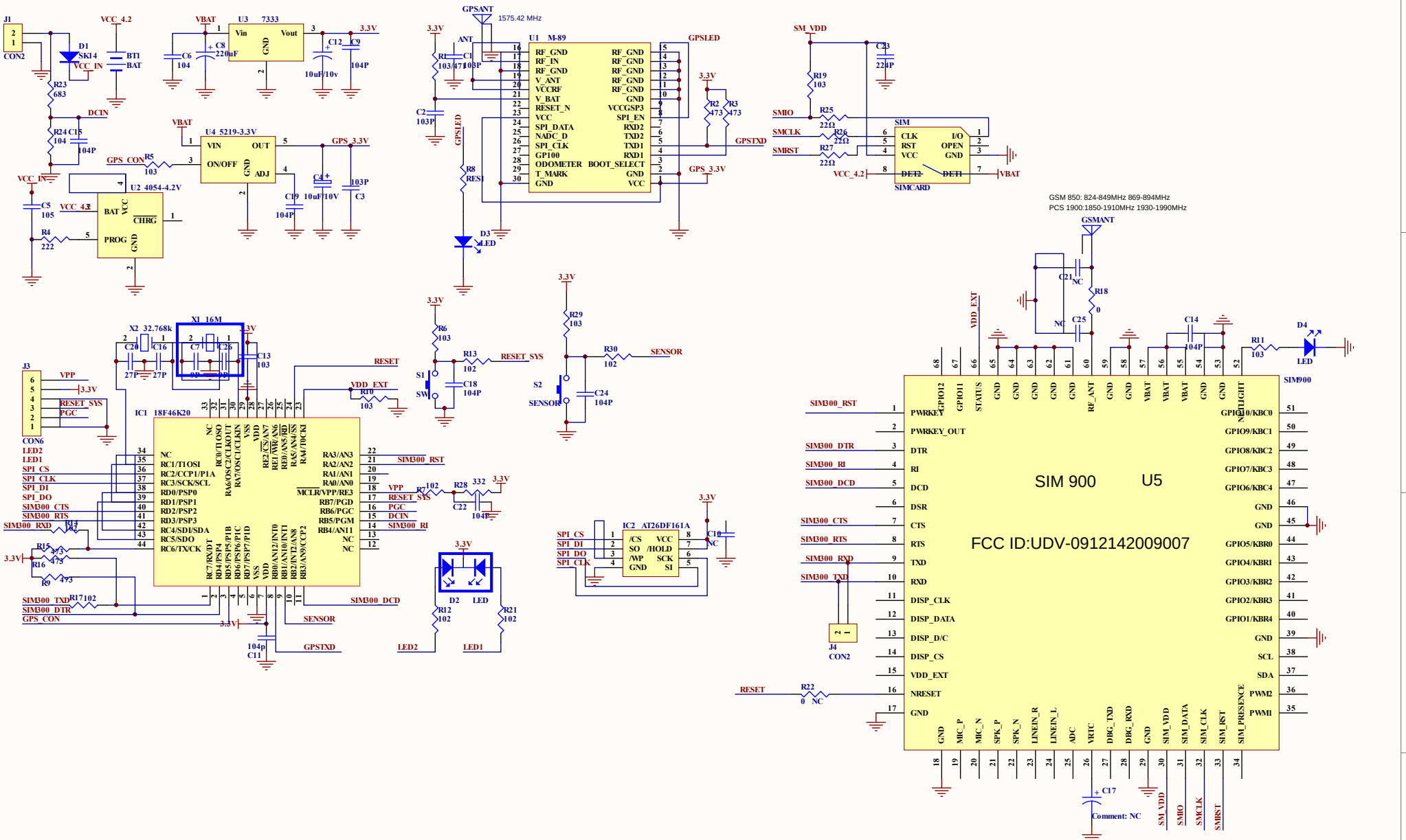

Title	CCTR700.SCH
Product Type	Tracker
Model	CCTR700
Company	SHENZHEN CARSCOP ELECTRONICS CO.,LTD
Data	2010.08.09