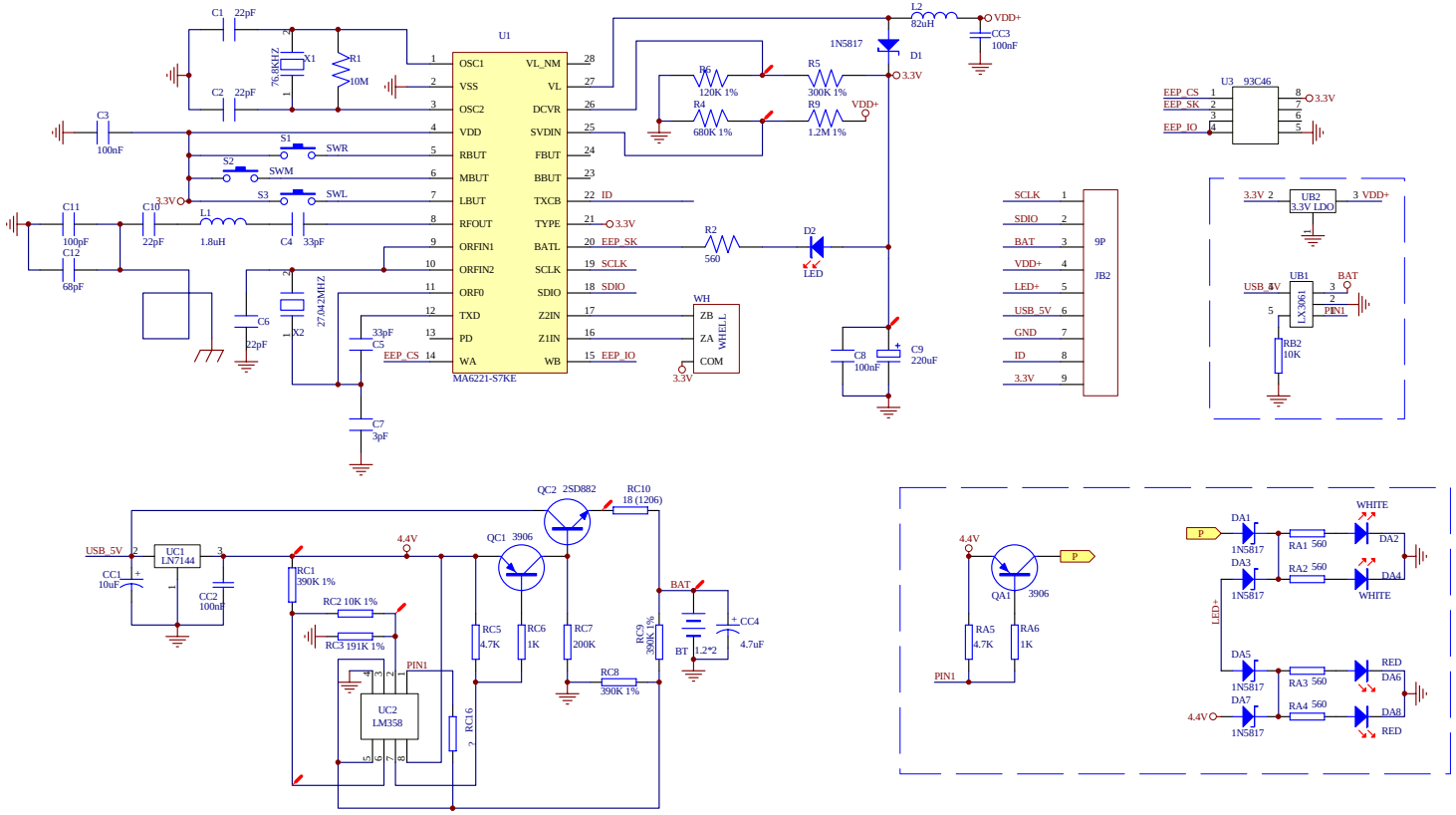

Title	27M 华矽方案线路图	
Size B	Number	Revision
Date: 17-Oct-2008	Sheet of	
File: E:\产品资料\KM9703(KM1021)\KM9703(KM1021)\KM9703(KM1021).DDB		