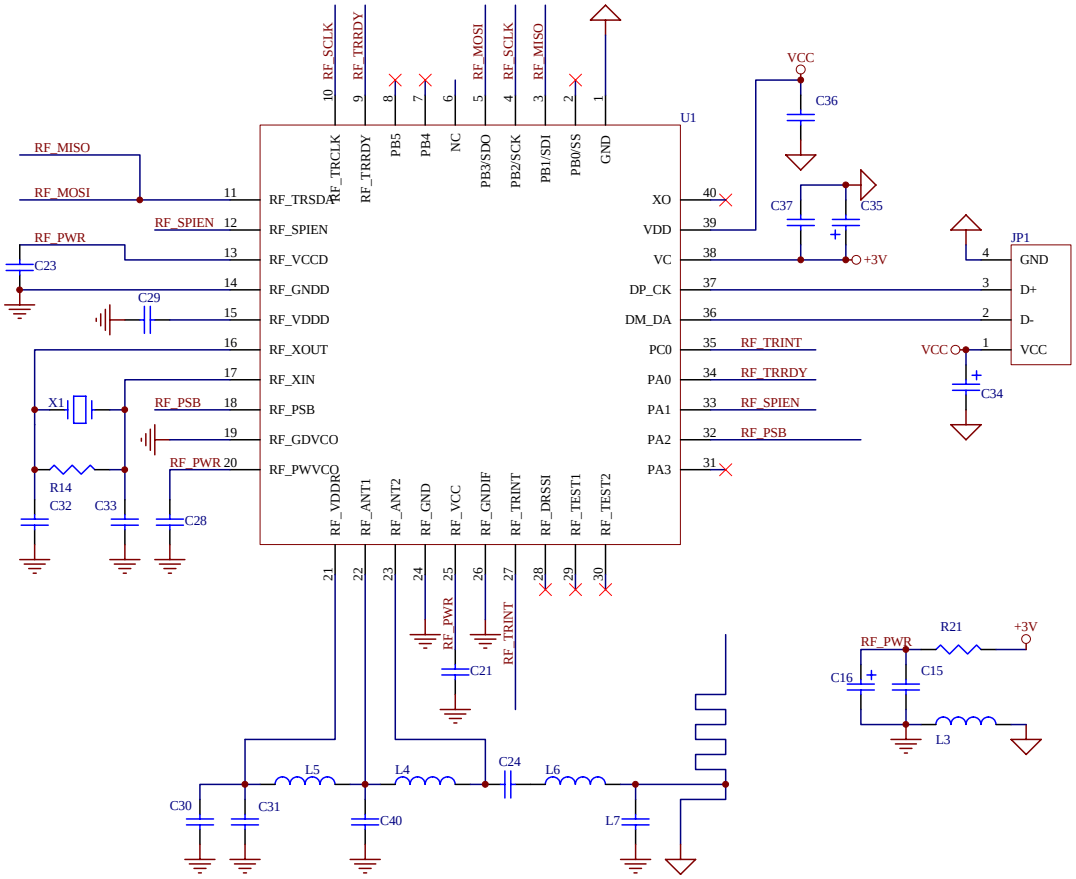

Title	2.4G SPRF2413A	
Size A4	Number *2.4G RF SoC RX Nano*	Revision VER:1.0
Date: 27-Nov-2009		Sheet of
File: E:\产品资料\Nano\Nano RE.Ddb		Drawn By: