77 GHz CRN Radar Sensor

External Photos

Product Model: 77V12CRN

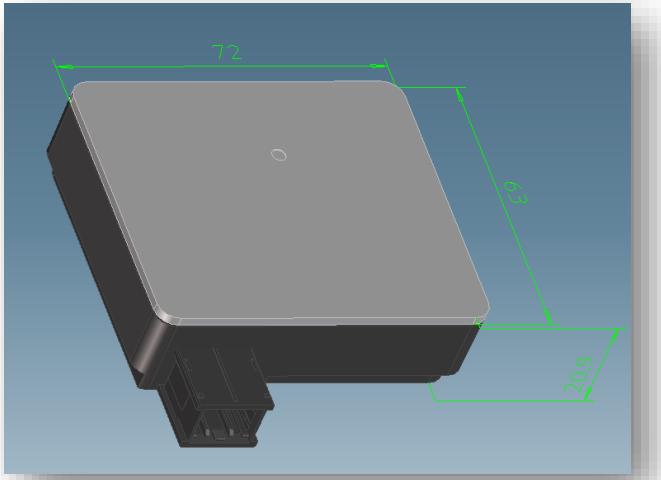

MODEL: 77V12CRN
Veoneer, INC.
U.S.A.
P/N:648325200C
DC: 19064
S/N:0479
Office DEPOT

Office DEPOT®

Office DEPOT

Office DEPOT

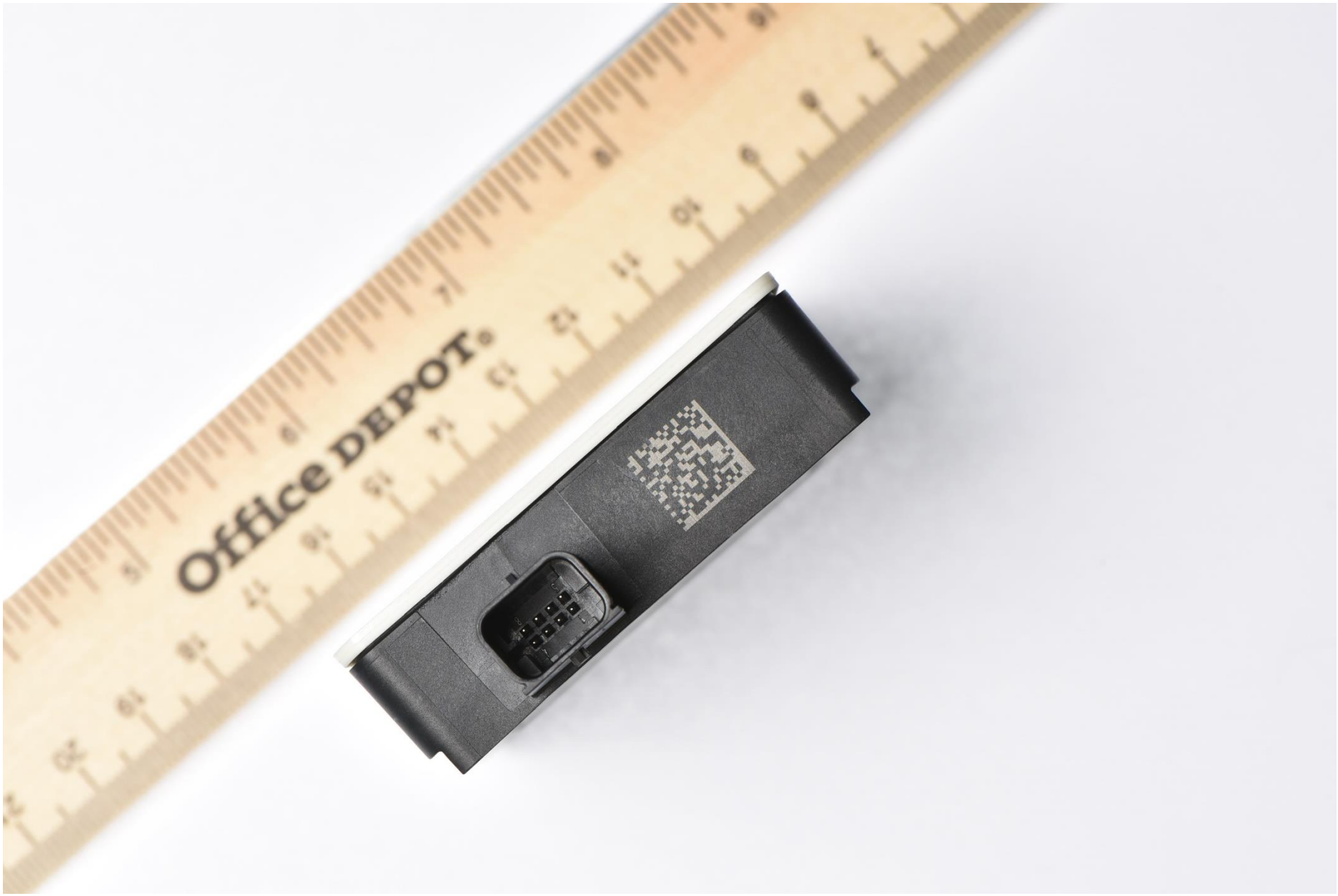
Office DEPOT

Office DEPOT