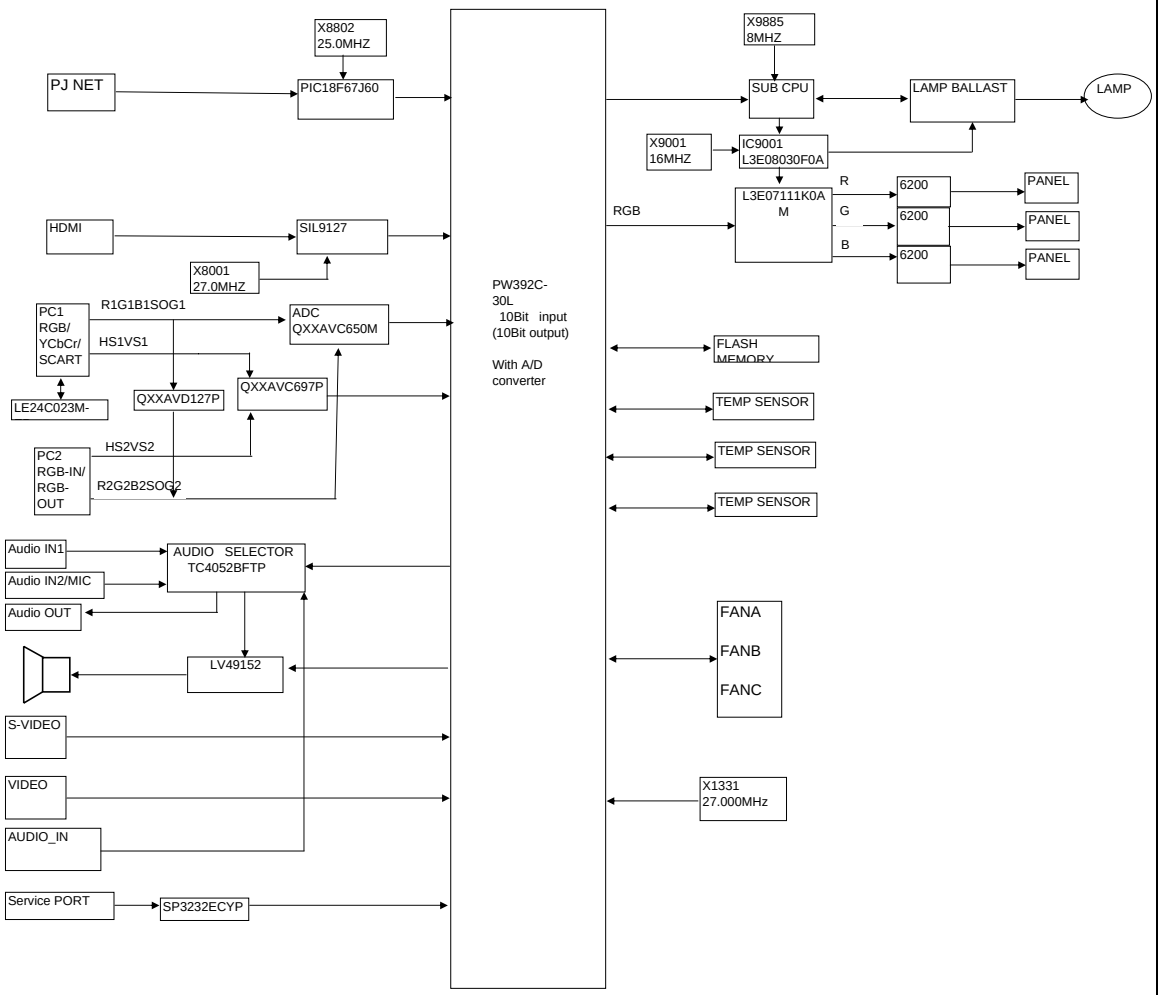LV-8320 BLOCK