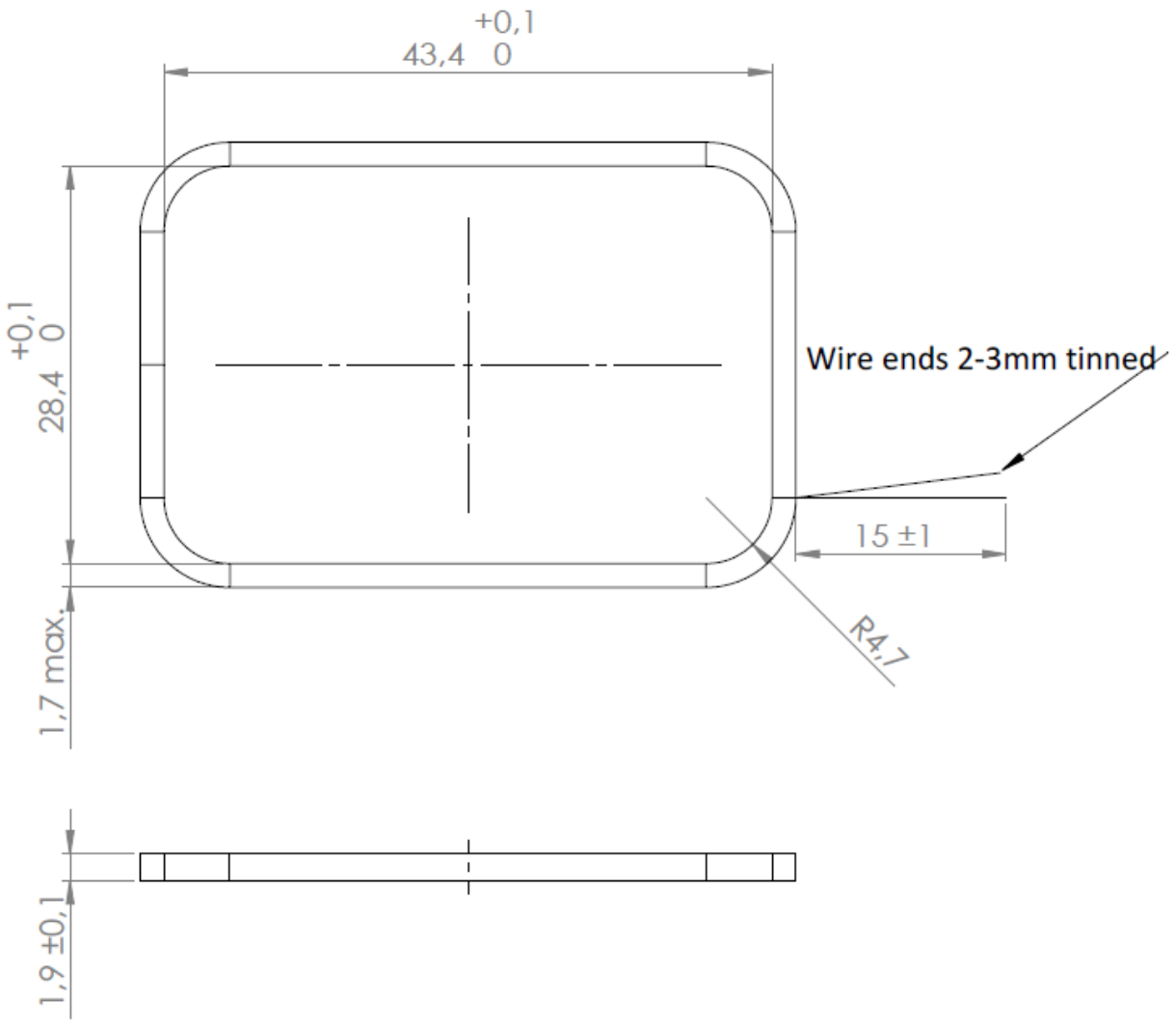

All dimensions in mm.

- Inductance: 490µH ± 5%
- Diameter of wire: 0,15mm
- Coil is fixed by using backed wire
- Leadfree and RoHS conform
- Turns: 123 - 128(max.)

	Date	Name	Comments
Drawn	06.06.2024	F.Eglsoer	
Modified	10.09.2024	F.Eglsoer	Turns

ANT-035 Specification for
TWN4 USB Front Reader LEGIC

ELATEC RFID Systems

Sheet 1 / 1