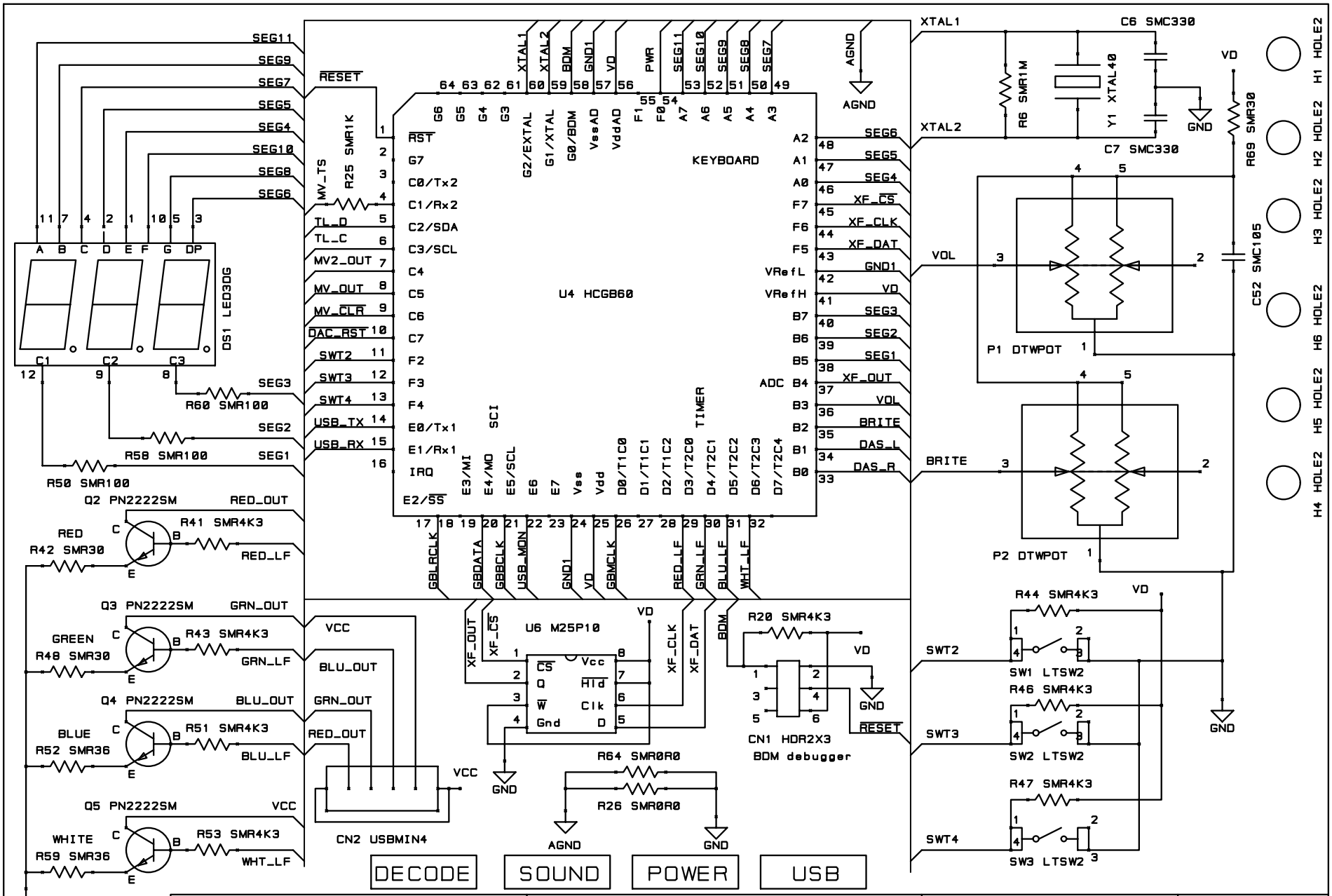

Procyon Rev-H & I	Mindplace 04/24/2007	1 of 5	TBS

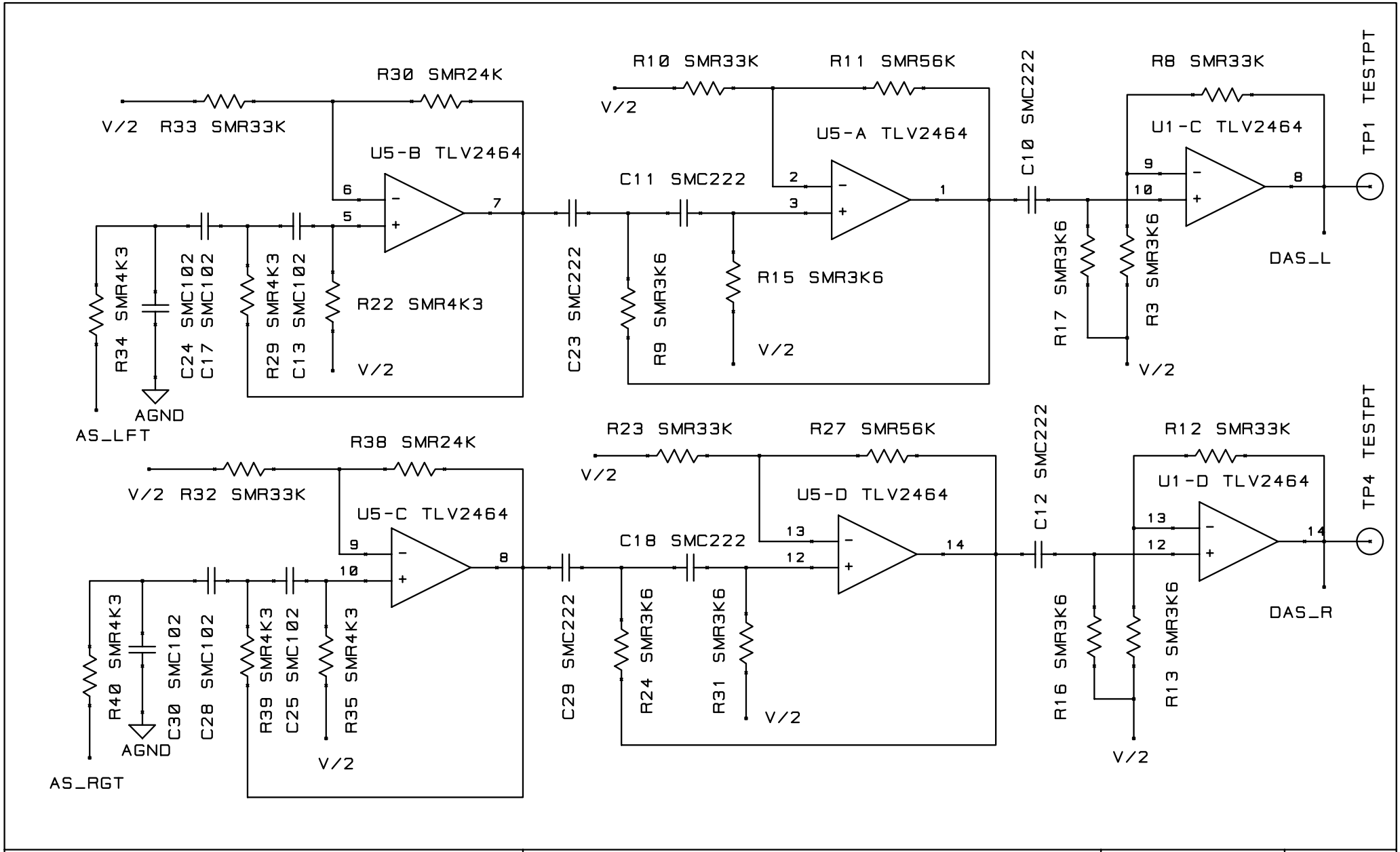

Procyon Rev-H & I	Audio Strobe Decoder	2 of 5	TBS

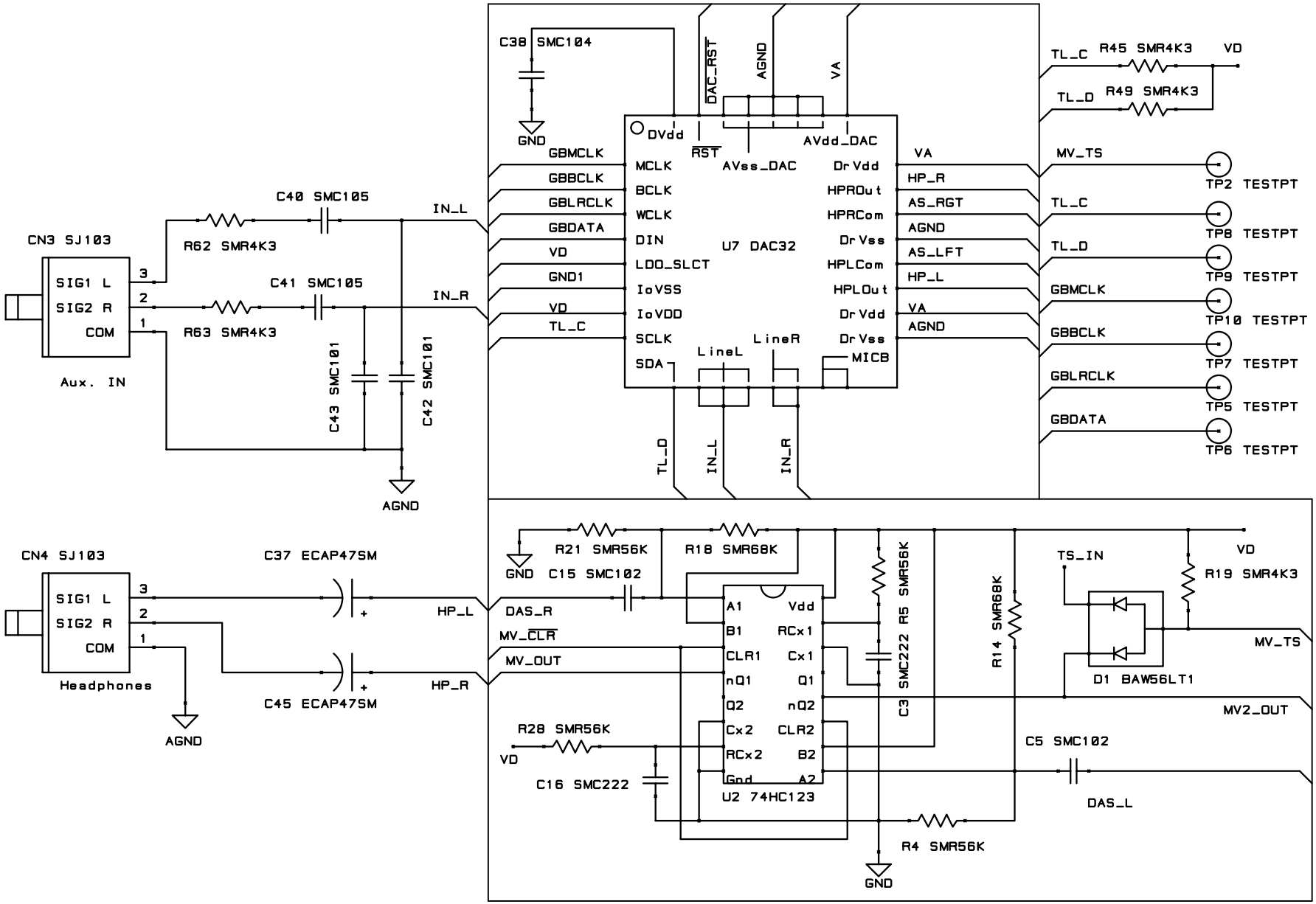

Procyon Rev H & I	Sound & DAS	3 of 5	TBS

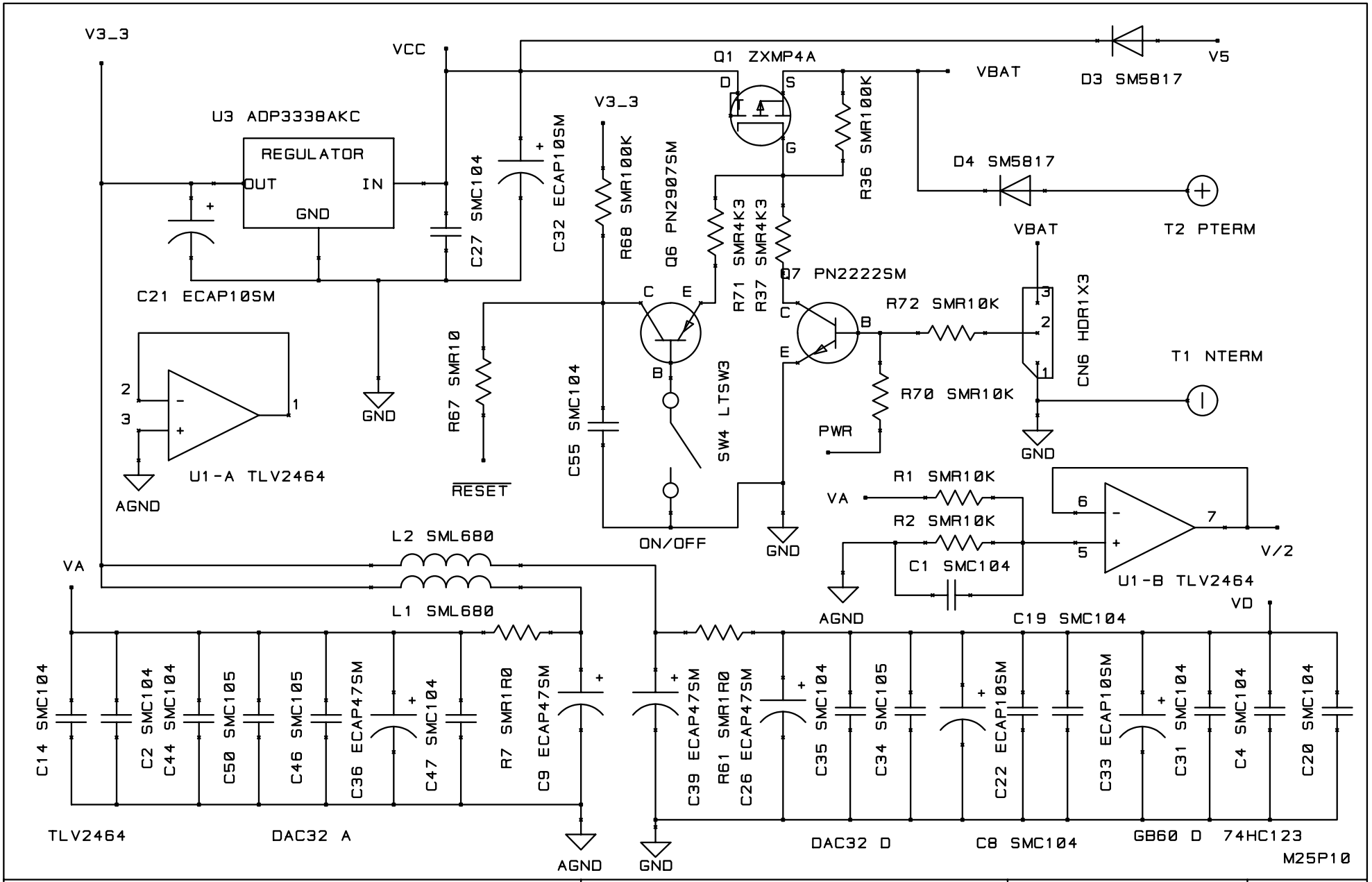

Procyon Rev H & I	Power Supply	4 of 5	TBS

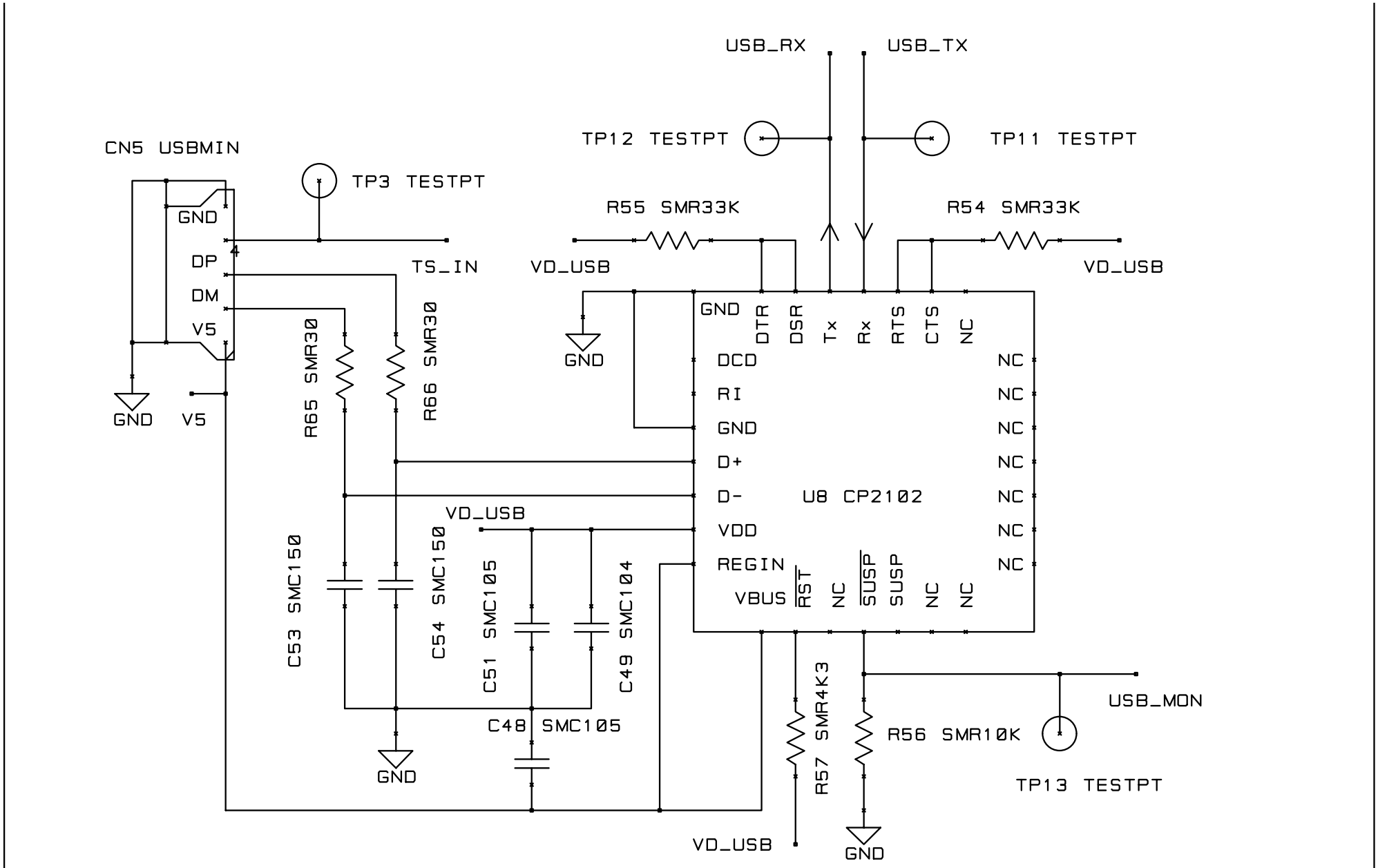

Procyon Rev H & I	USB	5 of 5	TBS