Rev	Description	Checked	Approval	Date
A	Initial Release			

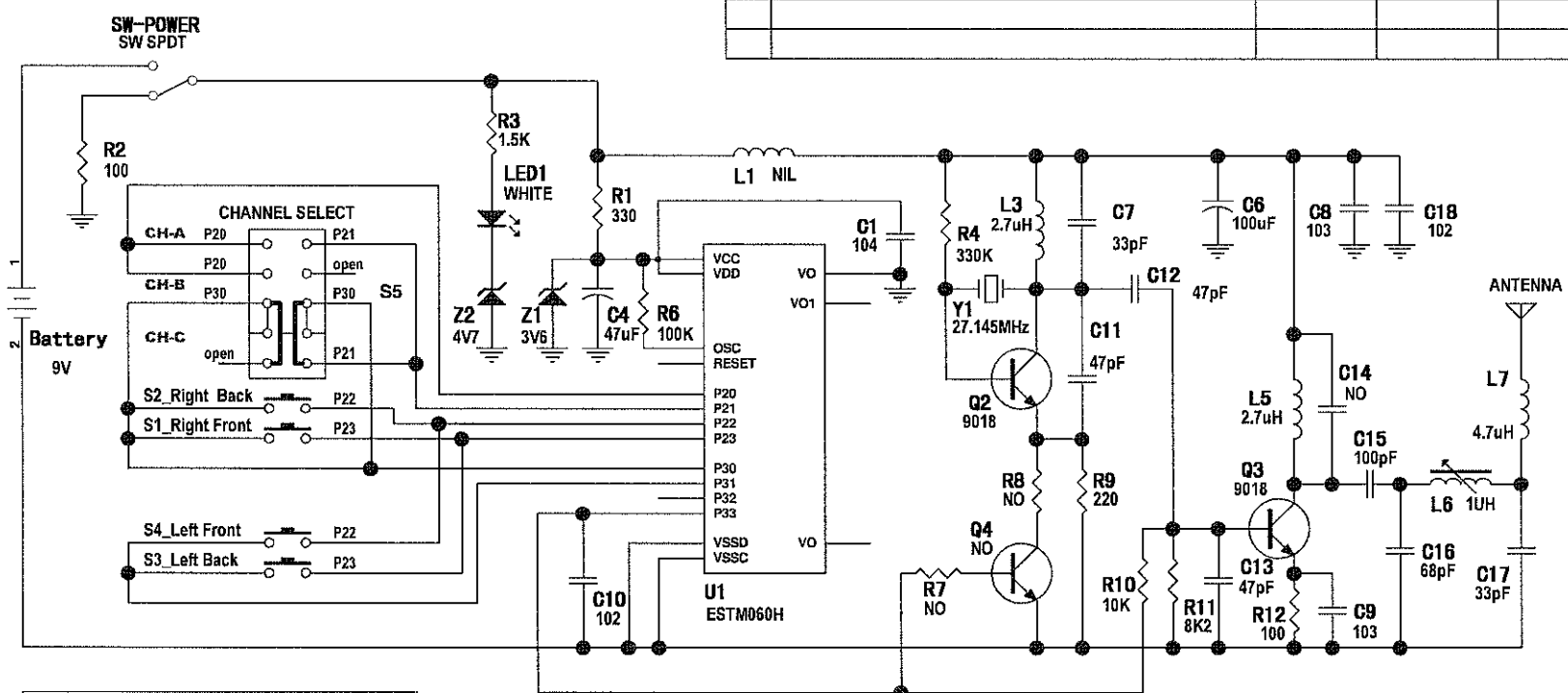

Ch A (program)	P21 open	P20 open
Channel A	P21 Short to P30	P20 Short to P30
Channel B	P21 open	P20 Short to P30
Channel C	P21 Short to P30	P20 open

BA060 RC CAR__Tx.SCH

General Notes:
This drawing is the property of Tinco Toys Co.,Ltd. and should not be shown to the third party without written permission.

DWN. By:

APP. By:

File Name:

Title	BA060 RC CAR-TX.SCH	
Size A4	Number BA060	Revision A
Date:		
File:		