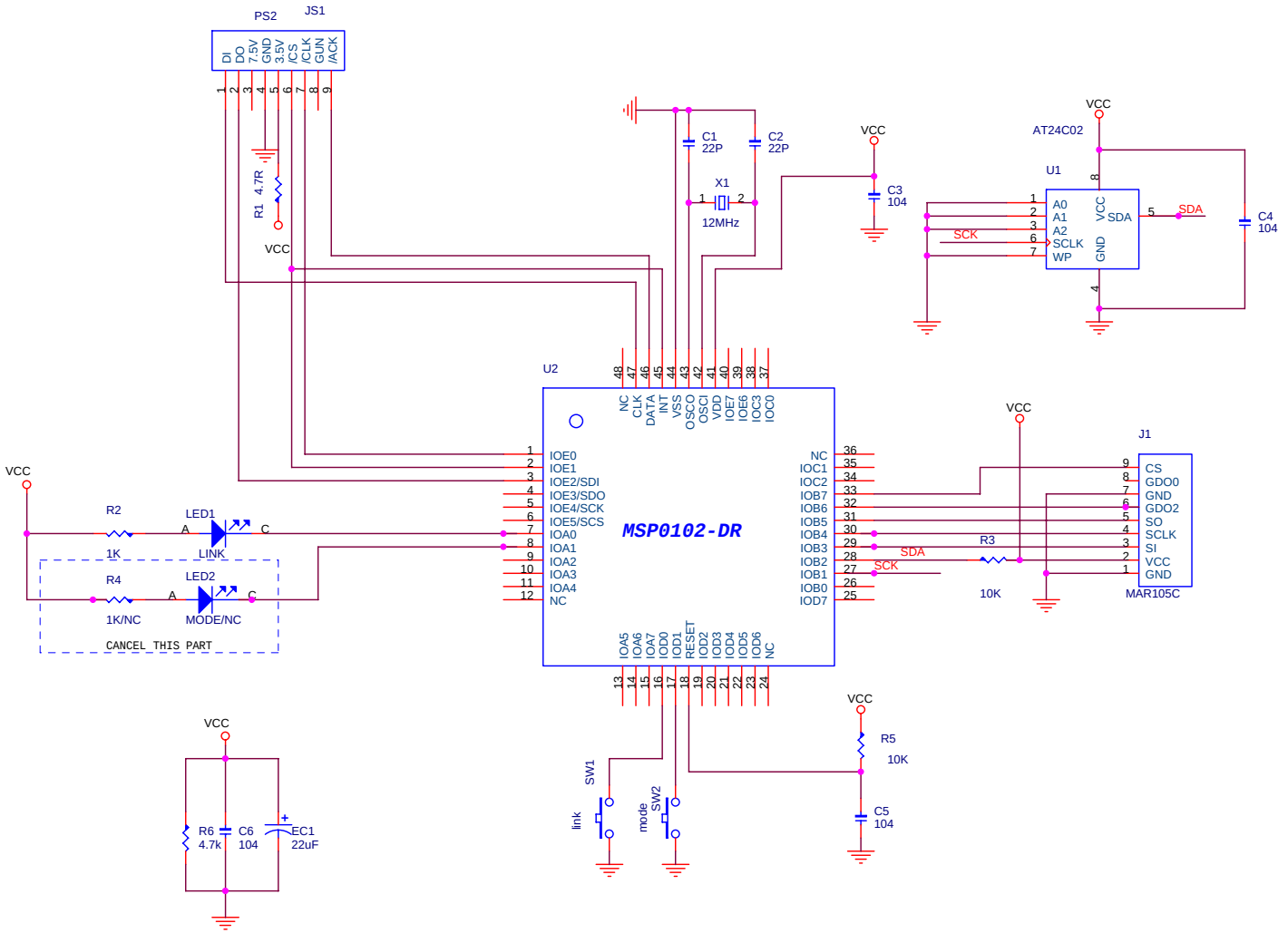

Guitar receiver