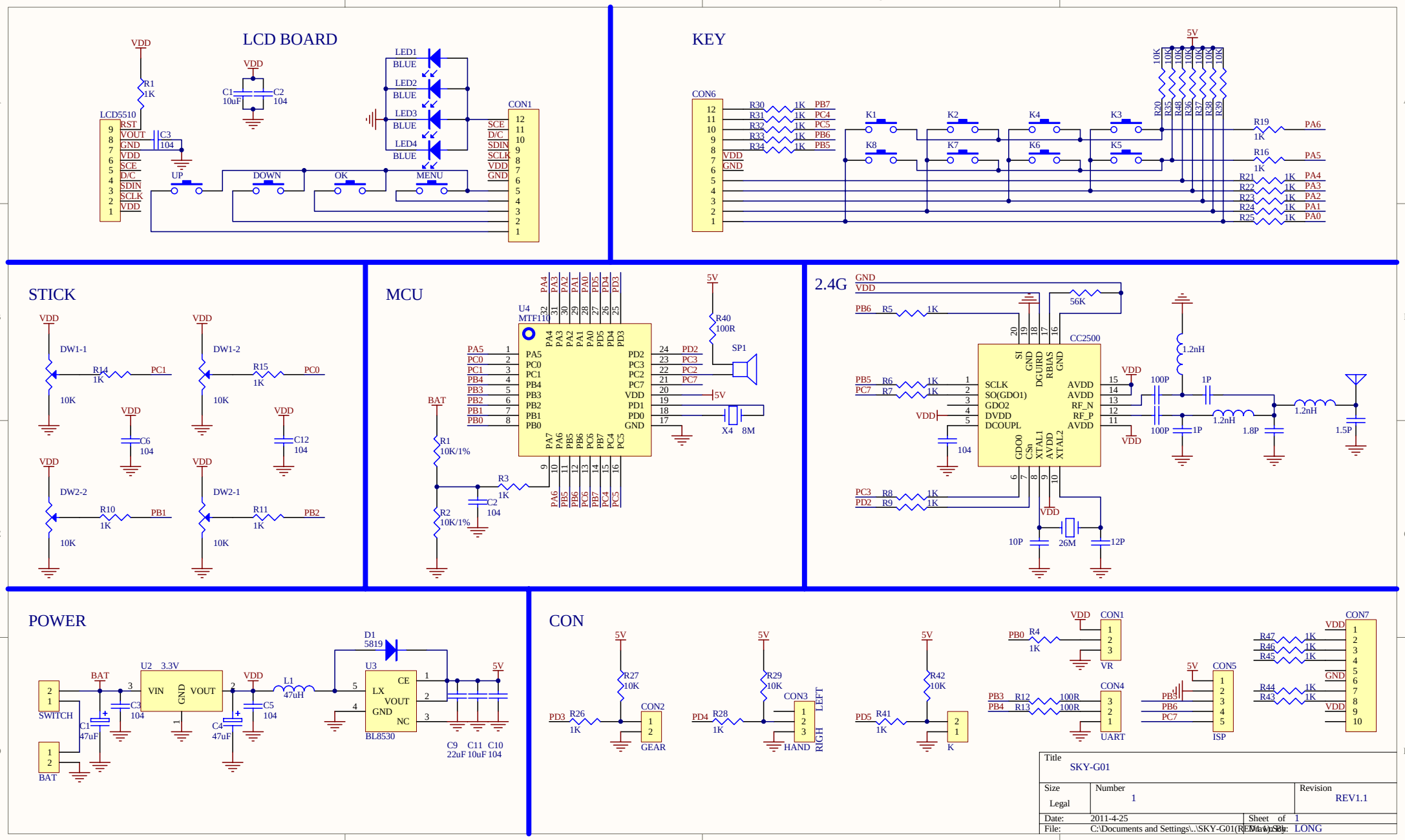
LCD BOARD
LCD5510
CON1
KEY
CON6
STICK
MCU
U4 MTF110
2.4G
CC2500
POWER
U2 3.3V
U3 BL8530
D1 5819
CON
CON2
CON3
CON4
CON5
CON7
Title
SKY-G01
Size
Legal
Number
1
Revision
REV1.1
Date: 2011-4-25
Sheet of 1
File: C:\Documents and Settings\..\SKY-G01(REV1.1).SCH
Drawn by: LONG