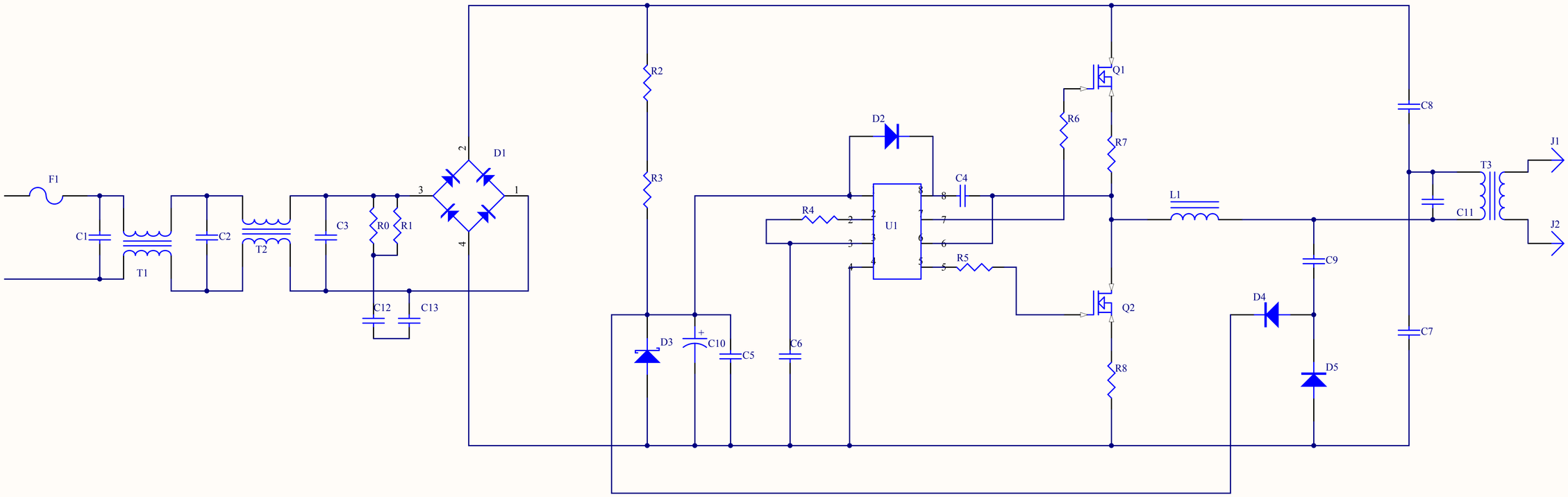

Title			
Size B	Number		Revision
Date:	2009-2-26	Sheet of	
File:	C:\Documents and Settings\..\SA418D	Drawn By:	