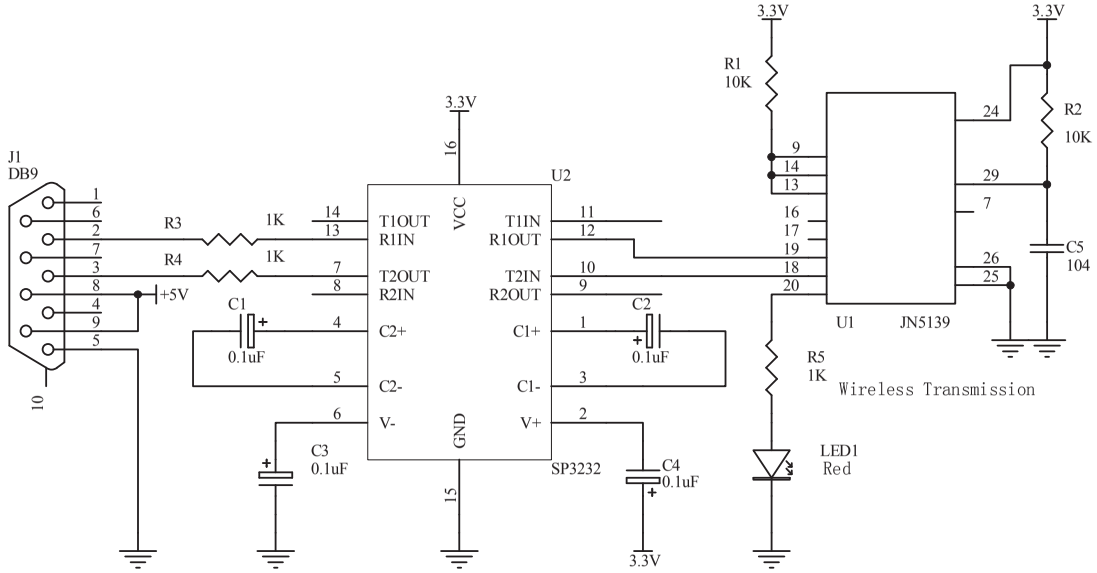
J1
DB9
R3
1K
R4
1K
+5V
C1
0.1uF
C2
0.1uF
C3
0.1uF
C4
0.1uF
3.3V
U2
T1OUT
R1IN
T2OUT
R2IN
C2+
C2-
V-
VCC
GND
T1IN
R1OUT
T2IN
R2OUT
C1+
C1-
V+
SP3232
R1
10K
R2
10K
R5
1K
C5
104
U1
JN5139
LED1
Red
Wireless Transmission

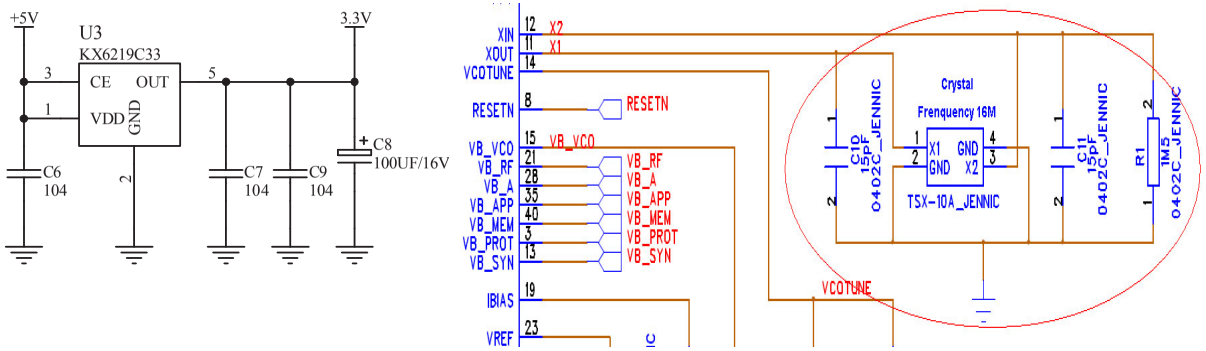
+5V
U3
KX6219C33
CE
OUT
VDD
GND
C6
104
C7
104
C9
104
C8
100UF/16V
3.3V
XIN
XOUT
VCOTUNE
RESETN
VB_VCO
VB_RF
VB_A
VB_APP
VB_MEM
VB_PROT
VB_SYN
IBIAS
VREF
X2
X1
Crystal
Frenquency 16M
TSX-10A_JENNIC
C10
15pF
0402C_JENNIC
C11
15pF
0402C_JENNIC
R1
1M5
0402C_JENNIC
Wireless Transmission