Avantronics	Product	BTHT-5150-BLK	Logo:	Avantree	Date:	2020.11.12
			Version:	V3	Comfirm Date:	

底座丝印

1

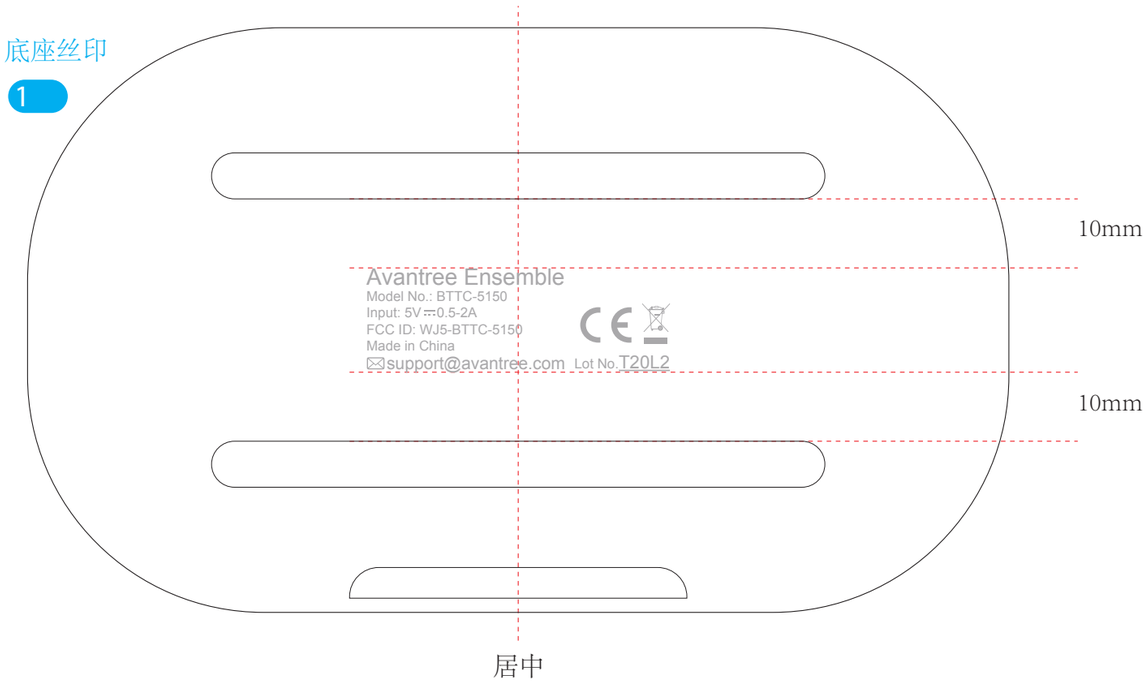

2

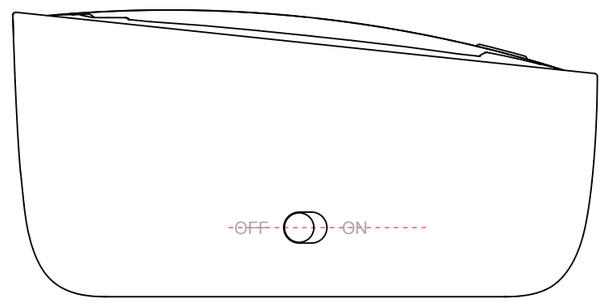

表面丝印

3

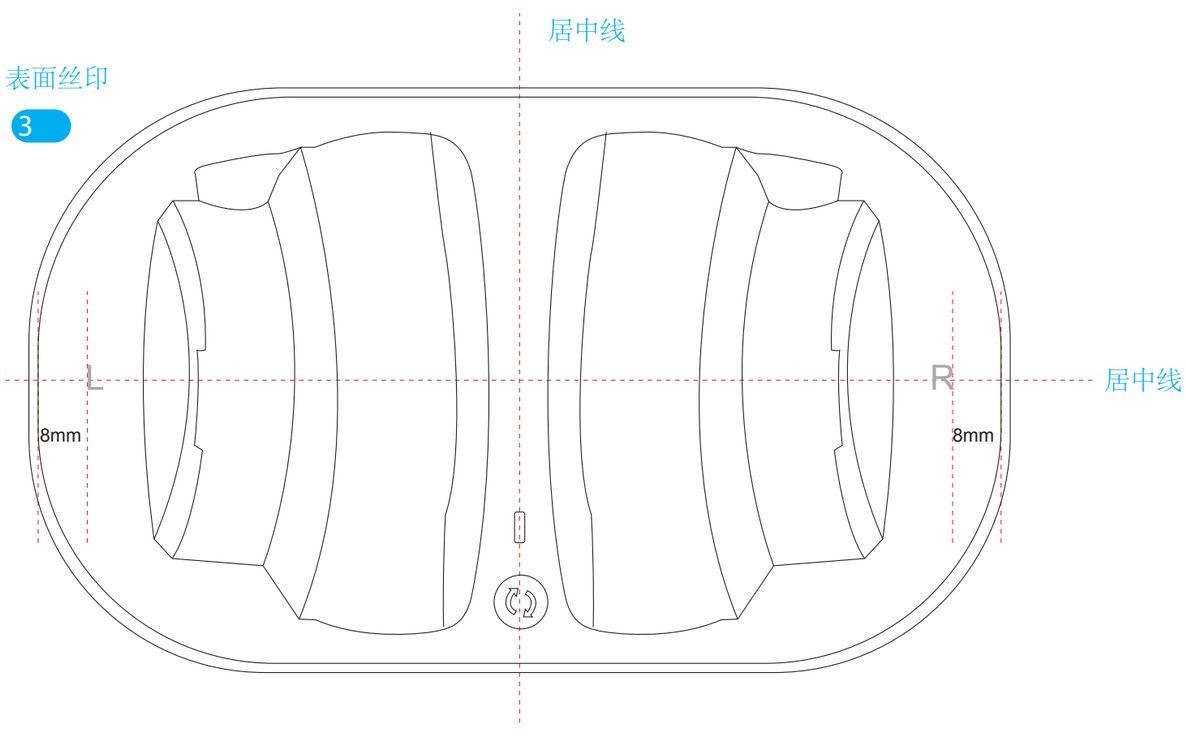

1

2

3

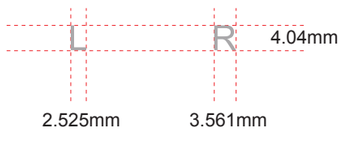

Features

PANTONE Gool Gray 6C

Scale: 1:1