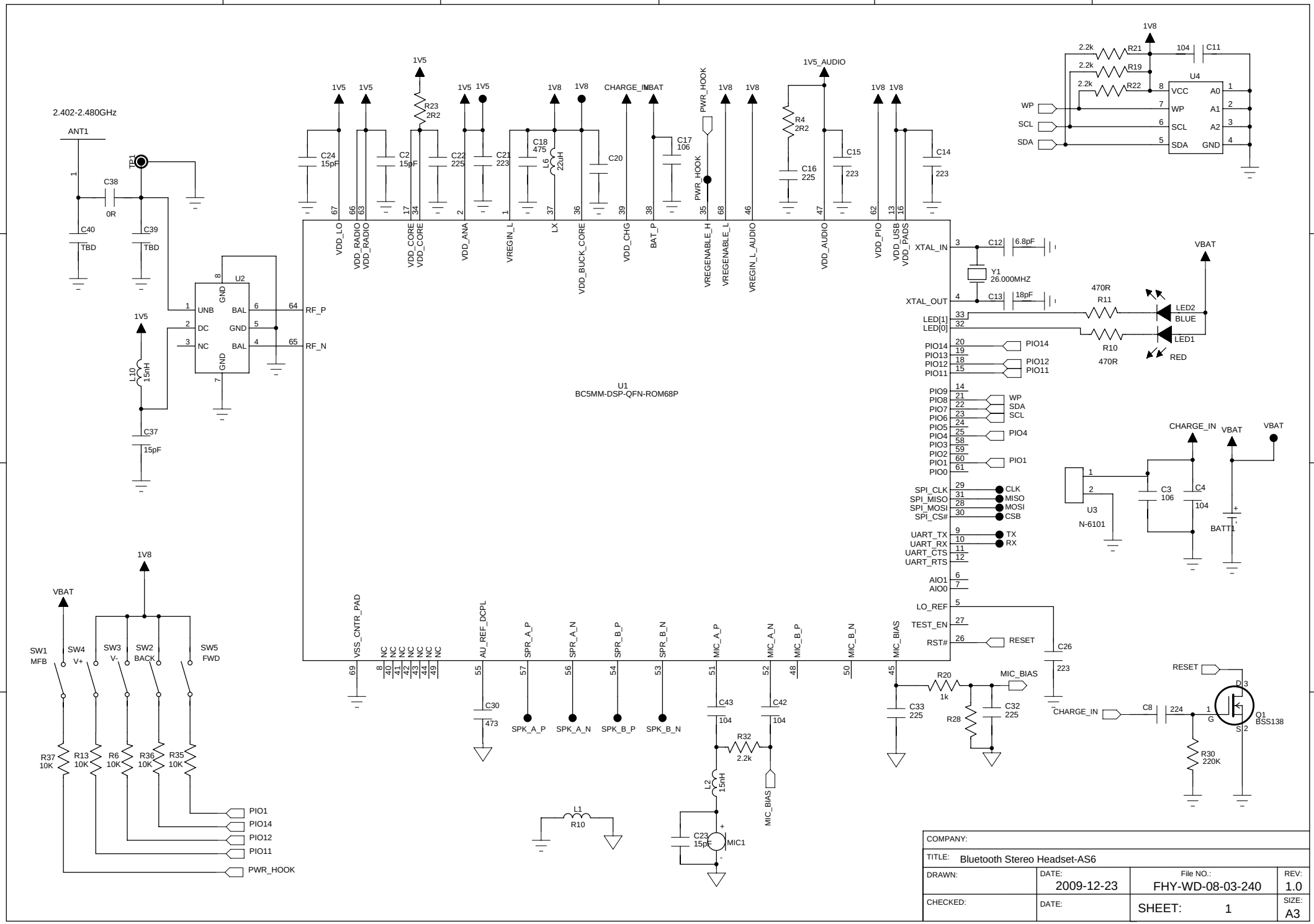

COMPANY:			
TITLE: Bluetooth Stereo Headset-AS6			
DRAWN:	DATE: 2009-12-23	File NO.: FHY-WD-08-03-240	REV: 1.0
CHECKED:	DATE:	SHEET: 1	SIZE: A3