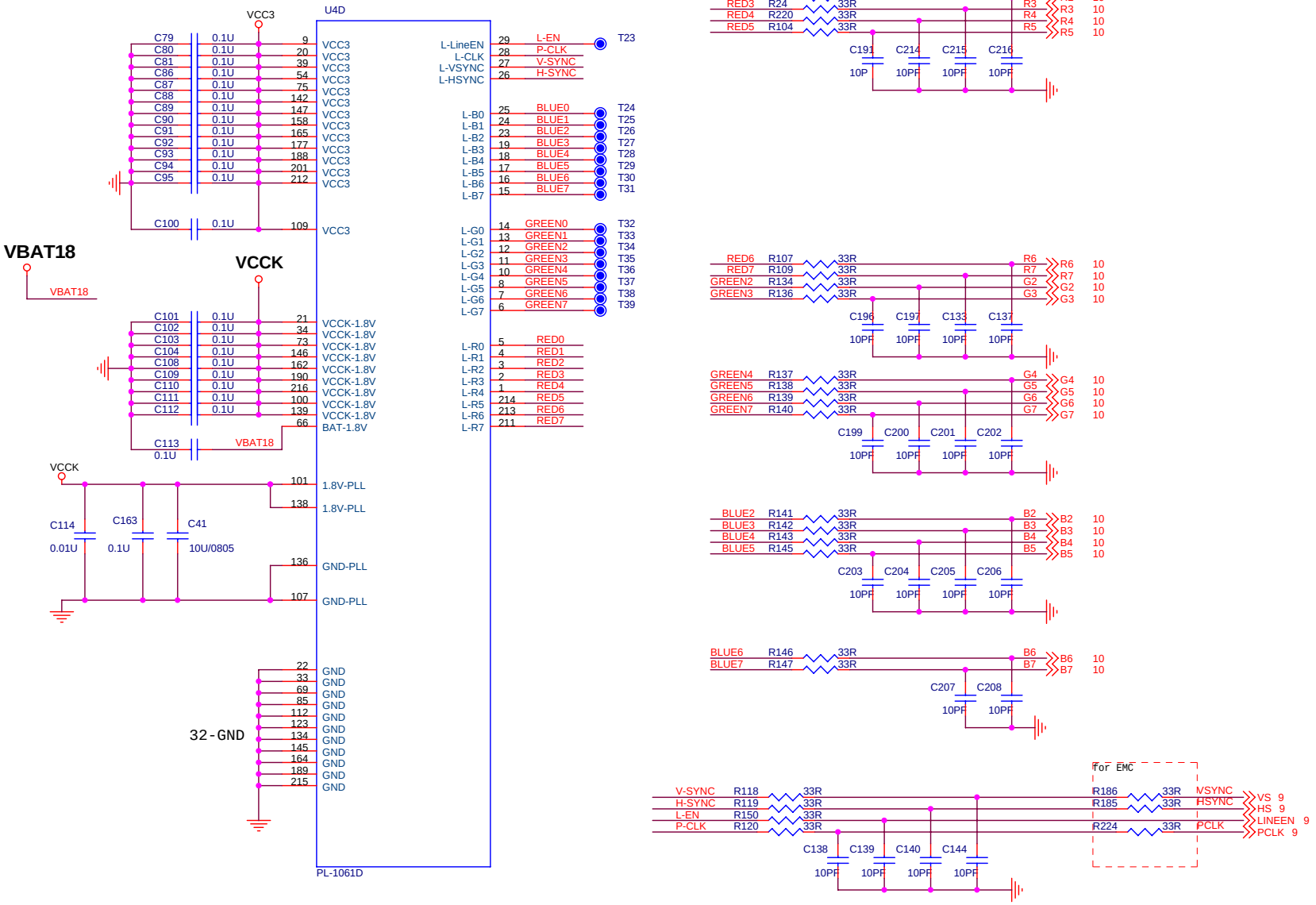

Prolific Technology Inc.

Title	PL1061D-QFP	
Size B	Document Number LCD-POWER-GND	Rev A
Date: Monday, March 03, 2008	Sheet 8 of 9	