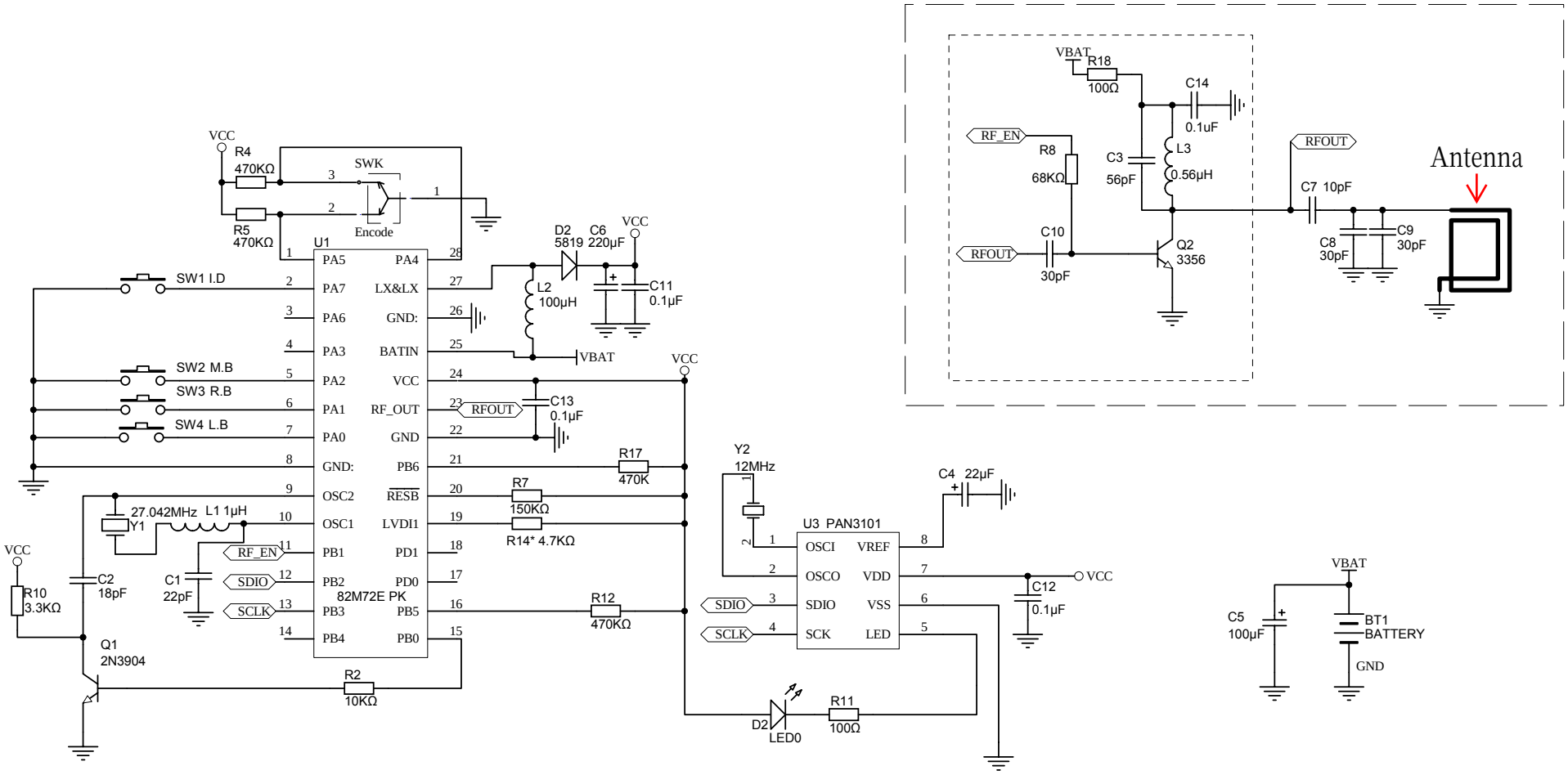

Title		
Size A4	Number BA-10102_A	Revision
Date: 22-Jul-2008	Sheet of	
File: F:\pcb\..\BA-10102_A.sch	Drawn By:	