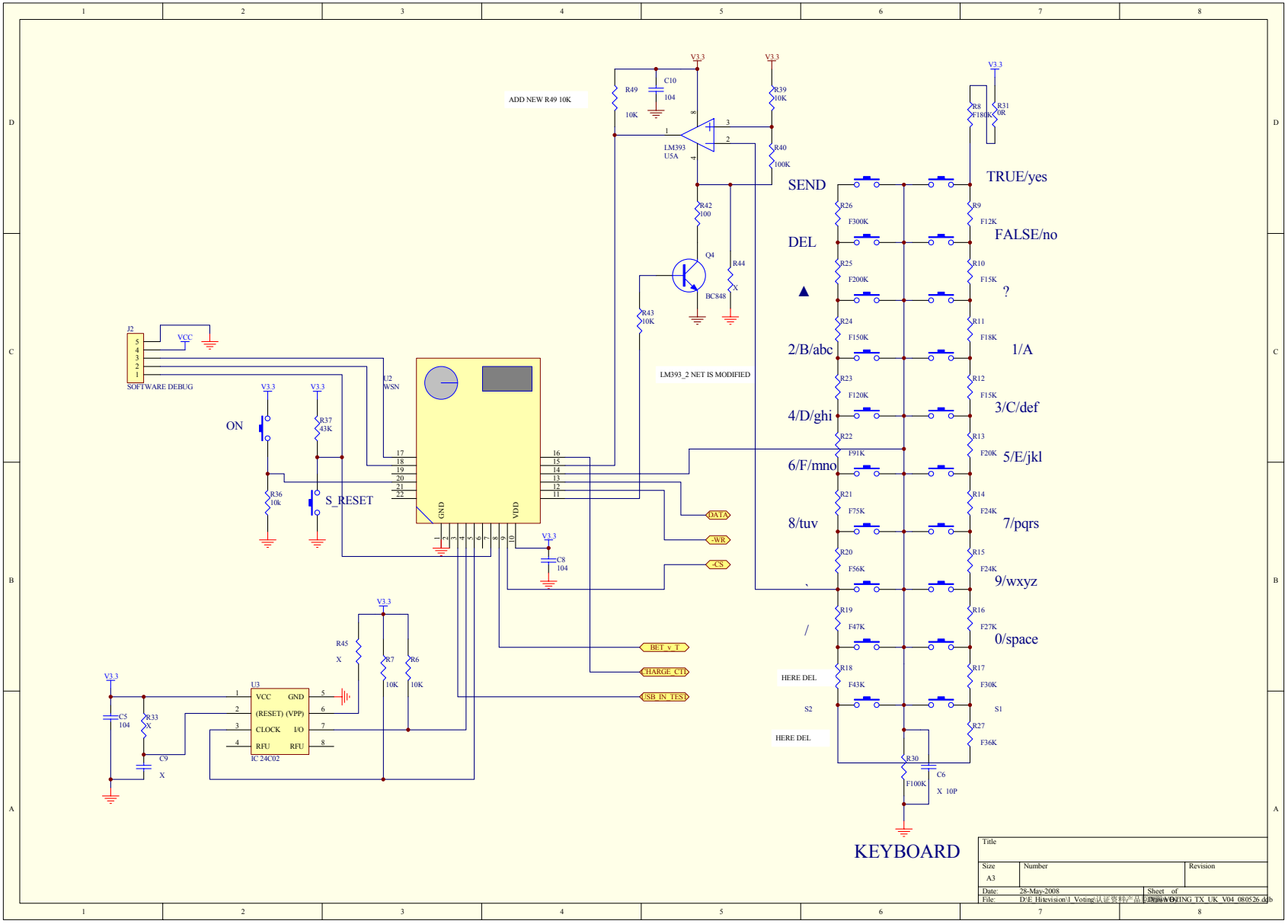

Title			
Size A3	Number		Revision
Date: 28-May-2008		Sheet of	
File: D:\E_Hirevision\1_Voting\认证资料\产品图纸\VOTING_TX_UK_V04_080526.dsb		Drawn by:	

VOTING_SENDER_UK

YANGZHEN

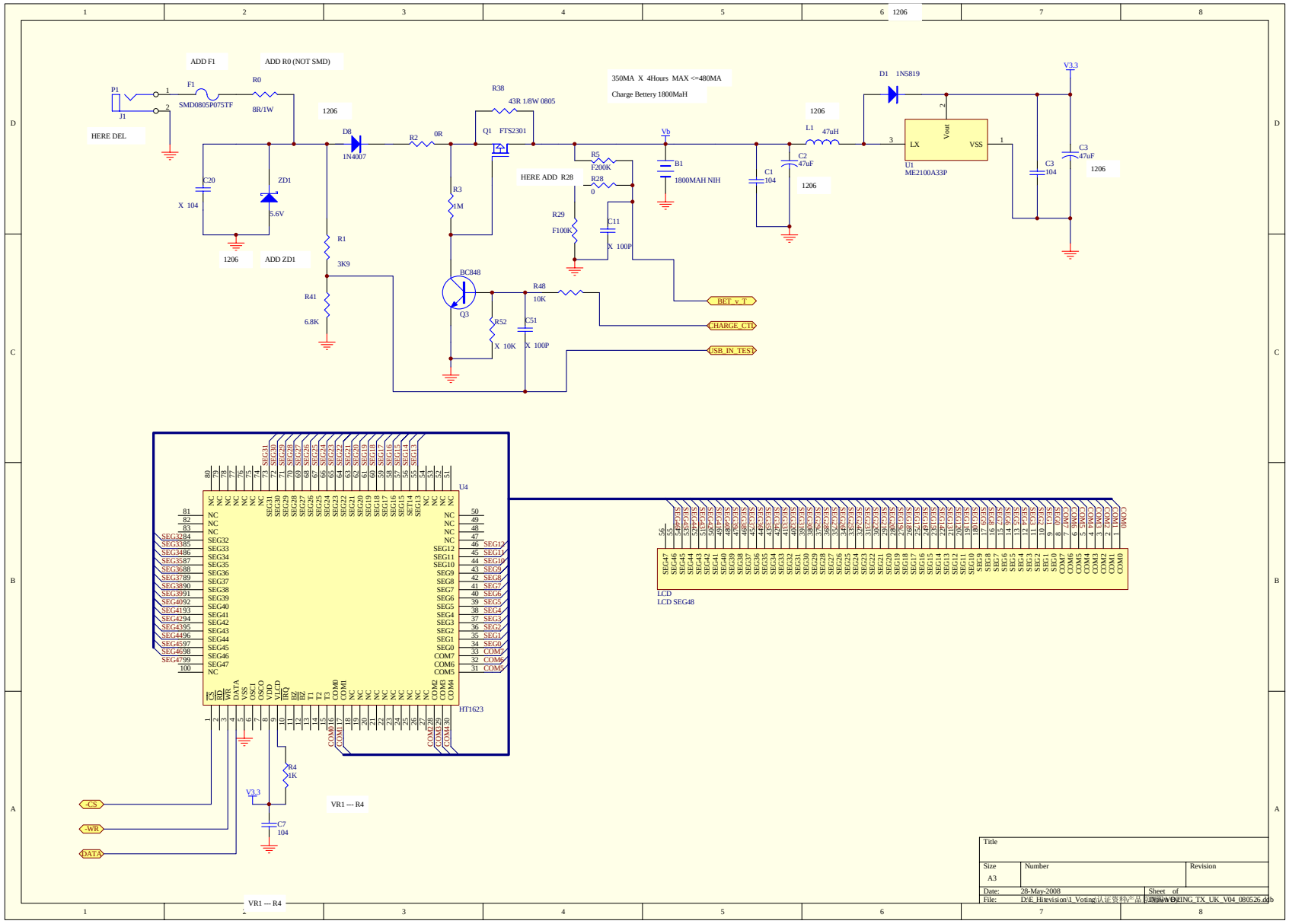
ADD F1
ADD R0 (NOT SMD)
P1
J1
F1
SMD0805P075TF
R0
8R/1W
HERE DEL
1206
D8
1N4007
R2
0R
R38
43R 1/8W 0805
Q1 FTS2301
350MA X 4Hours MAX <=480MA
Charge Bettery 1800MaH
Vb
B1
1800MAH NIH
D1 1N5819
V3.3
L1 47uH
LX
Vout
VSS
U1
ME2100A33P
C3
47uF
C3
104
C1
104
C2
47uF
C20
X 104
ZD1
5.6V
ADD ZD1
R1
3K9
R41
6.8K
R3
1M
HERE ADD R28
R5
F200K
R28
0
R29
F100K
C11
X 100P
BC848
Q3
R48
10K
R52
X 10K
C51
X 100P
BET_v_T
CHARGE_CTL
USB_IN_TEST
U4
HT1623
R4
1K
C7
104
-CS
-WR
DATA
VR1 — R4
LCD
LCD SEG48
Title
Size
A3
Number
Revision
Date: 28-May-2008
Sheet of
File: D:\E_Hirevision\1_Voting\认证资料\产品图纸\DRAWING\TX_UK_V04_080526.dwg
Drawn by: