REVISION			
No.	DATE	CHANGE CONTENTS	CHANGE CAUSE

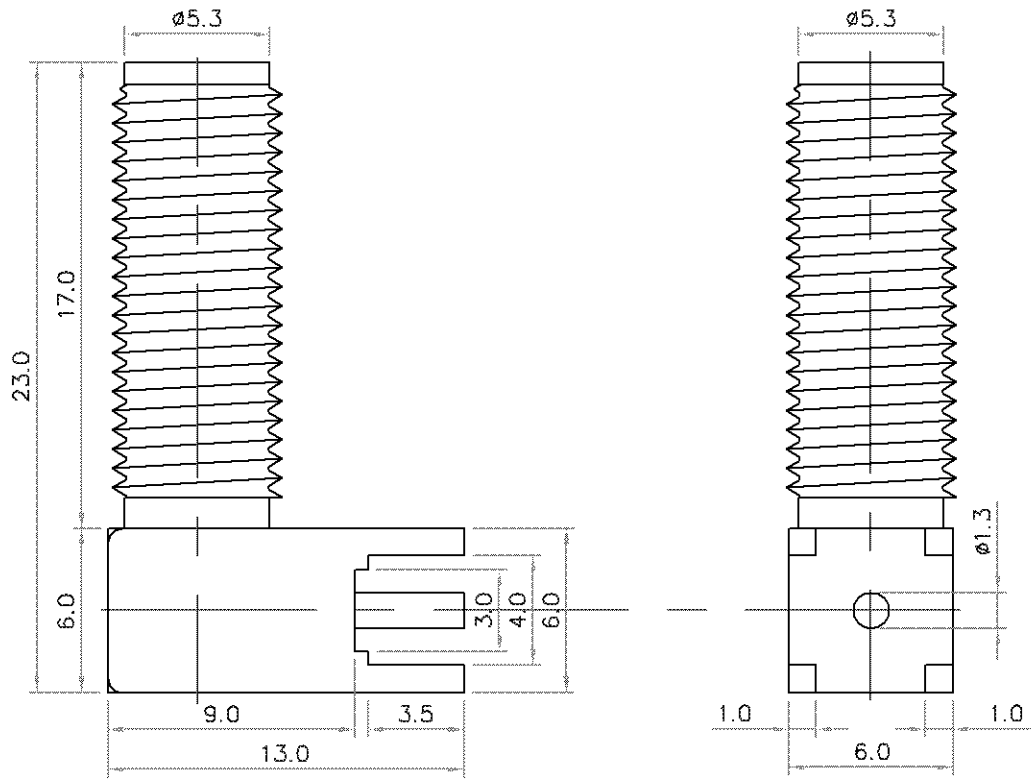

NO.	DESCRIPTION	Q'TY	MATERIAL	MATERIAL SIZE	REMARKS	REV
3	BODY	1 EA	BsBm	ø5.3 x 13.0 x 23.0	Au-Plating	IR
2	INSULATER	1 EA	Tefron	ø4.1 x 10.0		IR
1	PIN	1 EA	BeCu	ø1.3 x 20.0	Au-Plating	IR

MATERIAL	N / A	TITLE	Connector(SMA-4R(R/A)-PCB(M))
FINISH	April. 02 . 09		
MODEL NAME	N / A		
CP NAME	LSC-SMA-04		
DRAWING NO.	LSC-SMA-04		

TOLERANCE		DRAWN	DESIGN	CHECK	APPROVE
Decimal	Angle				
.X ±0.1					
.XX ±0.05					
SCALE	UNIT	REV			
4/1	mm	IR			09. 04. 02

LTUBI
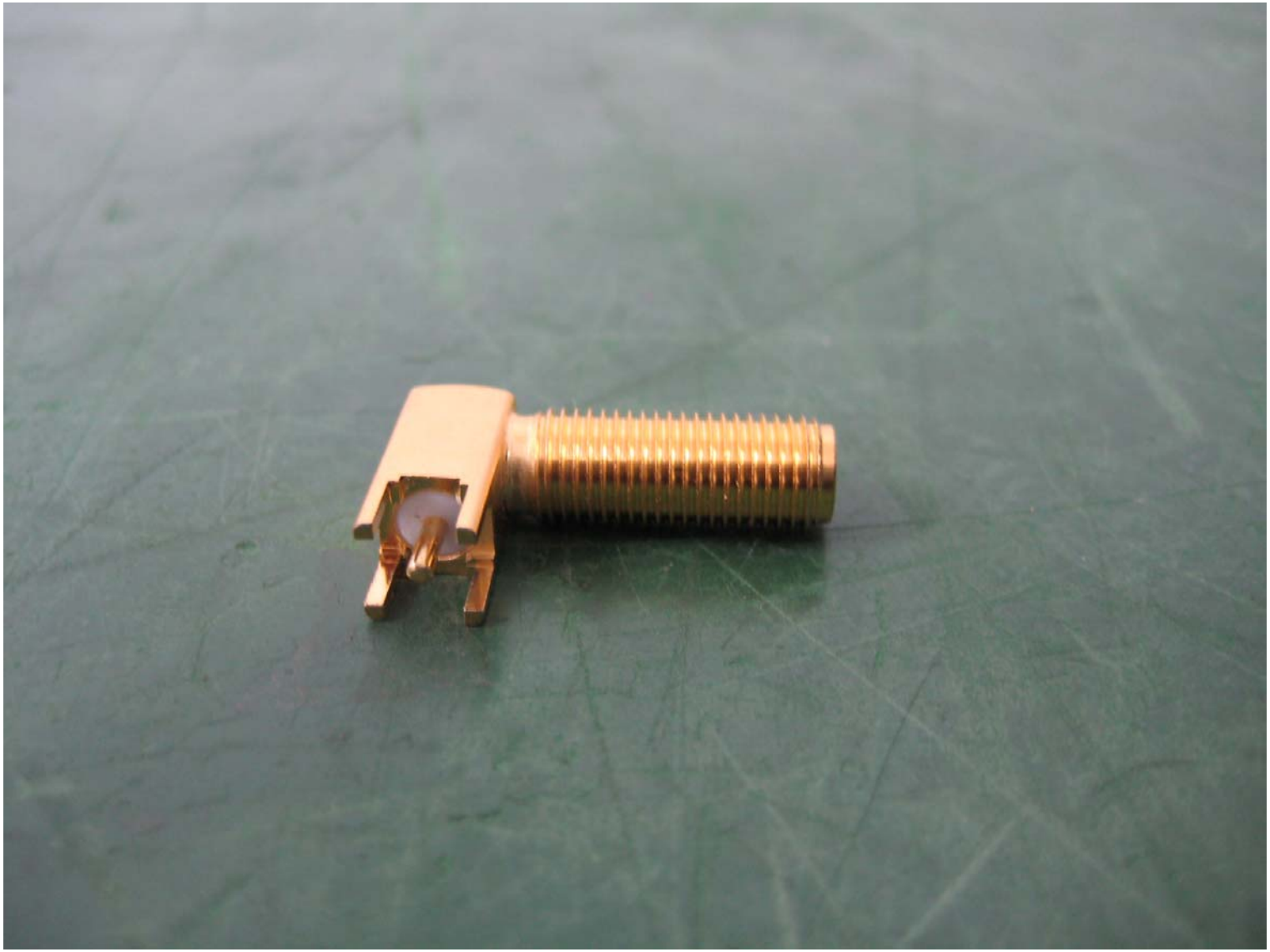
SHEET 1 / 1 A4