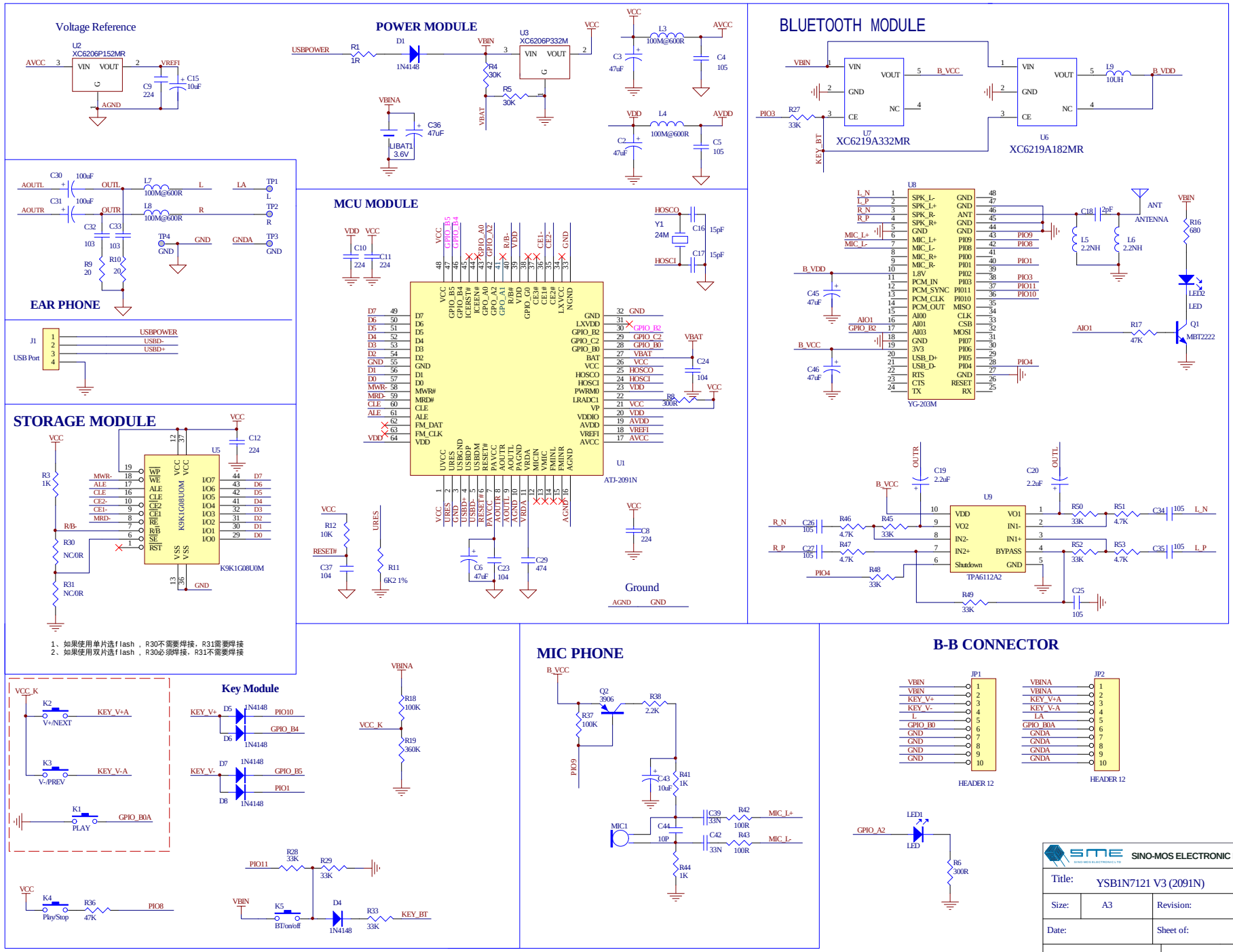
Voltage Reference
U2
XC6206P152MR
AVCC
VIN
VOUT
VREF1
C9
224
C15
10uF
AGND
POWER MODULE
USBPOWER
R1
1R
D1
1N4148
VBIN
U3
XC6206P332M
VCC
R4
30K
R5
30K
VBATA
C36
47uF
LIBAT1
3.6V
VBAT
L3
100M@600R
AVCC
C3
47uF
C4
105
VDD
L4
100M@600R
AVDD
C2
47uF
C5
105
BLUETOOTH MODULE
VBIN
VIN
VOUT
GND
CE
NC
B_VCC
U7
XC6219A332MR
PIO3
R27
33K
KEY_BT
L9
10UH
B_VDD
U6
XC6219A182MR
U8
YG-203M
ANT
ANTENNA
C18
2pF
L5
2.2NH
L6
2.2NH
R16
680
LED2
LED
Q1
MBT2222
AIO1
R17
47K
C45
47uF
C46
47uF
MIC_L+
MIC_L-
PIO9
PIO8
PIO1
PIO3
PIO11
PIO10
PIO4
MCU MODULE
U1
ATI-2091N
HOSCO
HOSCI
Y1
24M
C16
15pF
C17
15pF
VBAT
C24
104
R8
300R
VCC
C10
224
C11
224
C12
224
R12
10K
RESET#
C37
104
URES
R11
6K2 1%
C6
47uF
C23
104
C29
474
C8
224
Ground
AGND
GND
EAR PHONE
C30
100uF
C31
100uF
AOUTL
AOUTR
OUTL
OUTR
L7
100M@600R
L8
100M@600R
LA
TP1
TP2
TP3
TP4
C32
C33
103
R9
20
R10
20
GNDA
J1
USB Port
USBPOWER
USBD-
USBD+
STORAGE MODULE
U5
K9K1G08U0M
R3
1K
R30
NC/0R
R31
NC/0R
R/B-
MWR-
ALE
CLE
CE2-
CE1-
MRD-
1、如果使用单片选flash，R30不需要焊接，R31需要焊接
2、如果使用双片选flash，R30必须焊接，R31不需要焊接
Key Module
VCC_K
K2
KEY_V+A
V+/NEXT
K3
KEY_V-A
V-/PREV
K1
GPIO_B0A
PLAY
KEY_V+
KEY_V-
D5
D6
D7
D8
1N4148
PIO10
GPIO_B4
GPIO_B5
PIO1
VBINA
R18
100K
R19
360K
K4
Play/Stop
R36
47K
PIO8
PIO11
R28
33K
R29
33K
K5
BT/on/off
D4
R33
33K
KEY_BT
MIC PHONE
B_VCC
Q2
3906
R37
100K
R38
2.2K
PIO9
C43
10uF
R41
1K
MIC1
C44
10P
C39
33N
R42
100R
C42
33N
R43
100R
MIC_L+
MIC_L-
R44
1K
B-B CONNECTOR
JP1
JP2
HEADER 12
LED1
LED
GPIO_A2
R6
300R
SINO-MOS ELECTRONIC LTD.
Title:
YSB1N7121 V3 (2091N)
Size:
A3
Revision:
Date:
Sheet of:
File:
Draw by: