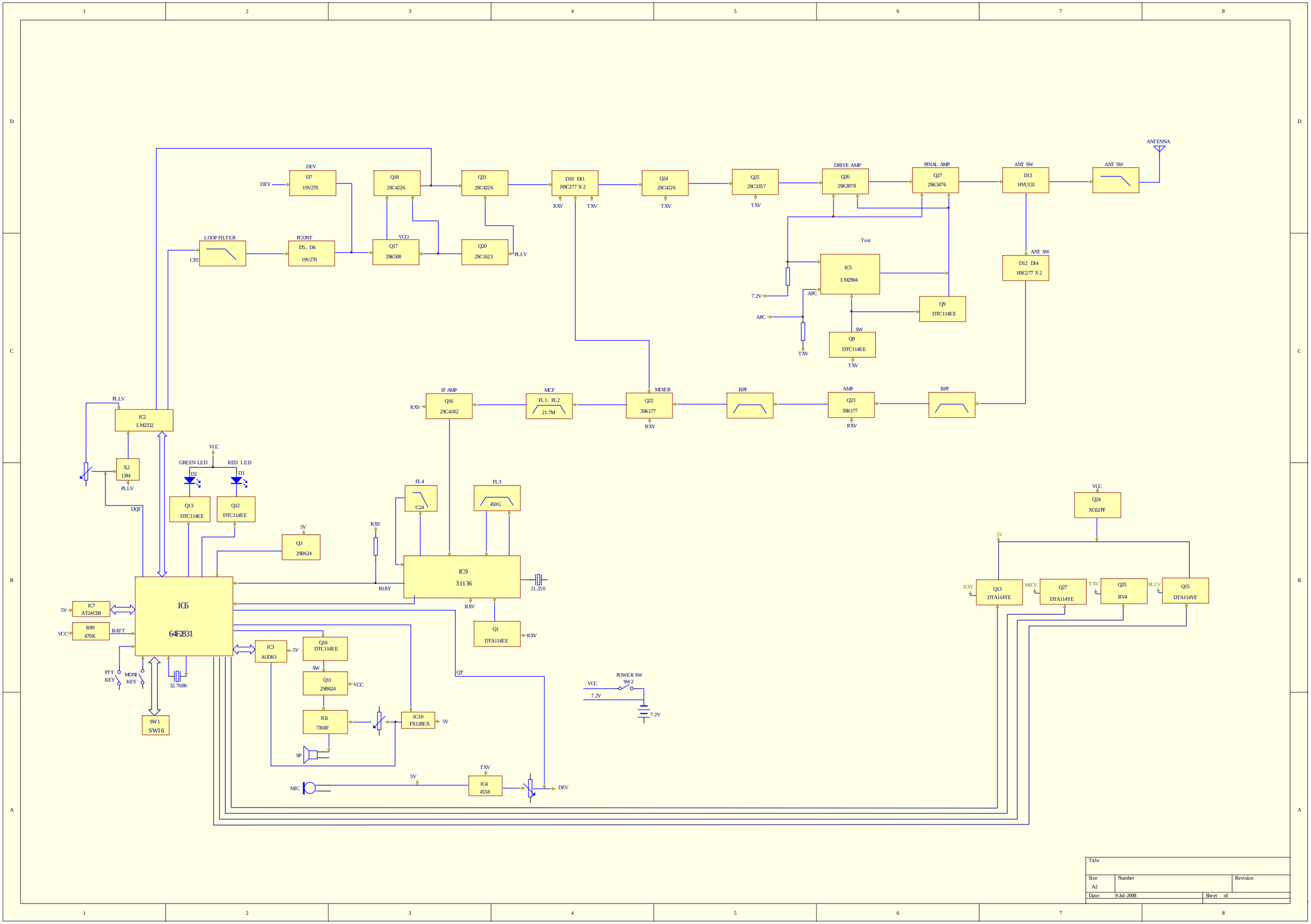

Title		
Size A2	Number	Revision
Date: 9-Jul-2008	Sheet of	