WINBEL CO. LTD 嘉寶利有限公司

9C Fully Industrial Building
6 Tsun Yip Lane
Kwun Tong, HK
Tel: (852) 23421811
Fax: (852) 27906322

Date : 17/9/2008

The Hong Kong Standards and Testing Centre Ltd.,

Attn.: Ms Eva Sin
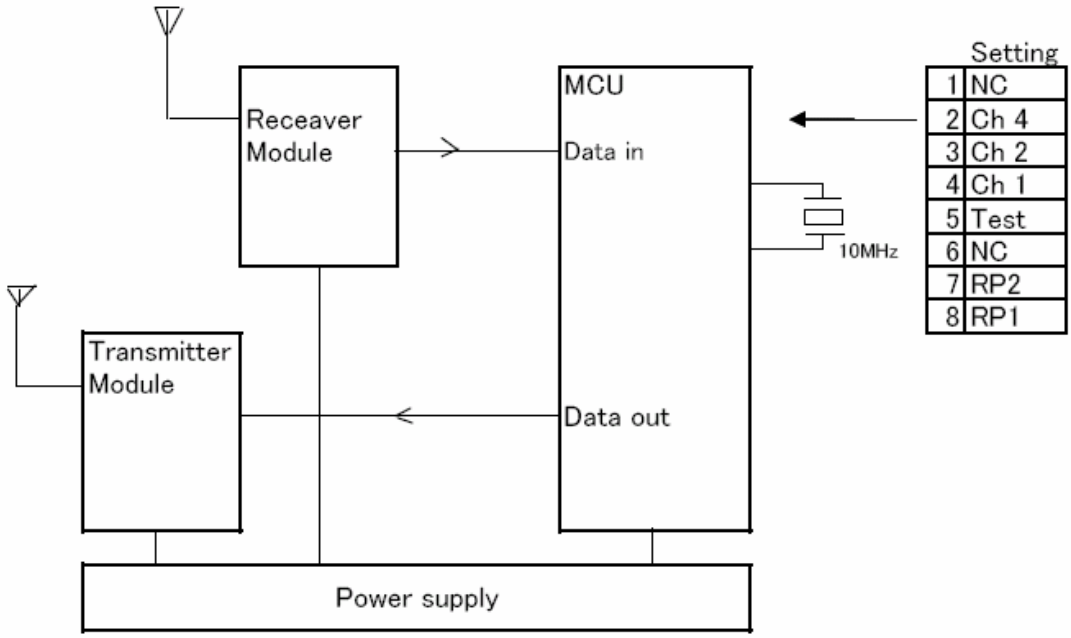
Block Diagram for Model: WM109U7